Float Auto Drain 1/2" with Sight Bowl

HAD500

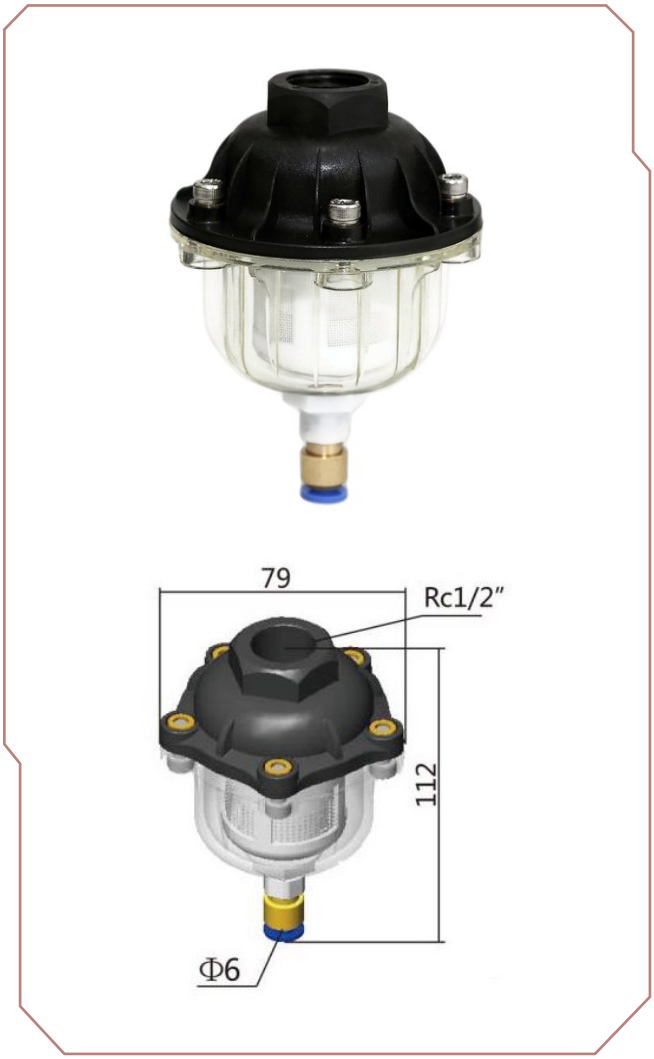

Dimensions in mm

Description

The Ultramax Systems HAD500 is a float-operated automatic condensate drain that discharges at a rate matched to the incoming condensate. When buoyancy is less than the float weight plus air pressure, the outlet stays closed. As the forces approach balance, the drain partially opens for a gentle, controlled trickle discharge, and when buoyancy exceeds them it opens fully. A transparent housing shows the internal condensate level at a glance. It is rated to 16 bar (232 psi) and 1.5 to 85 °C, with a 1/2" inlet and 6 mm push-in outlet.

Features

- Float ball mechanism discharges in proportion to condensate inflow
- Gentle trickle discharge near balance, full opening under load
- Closes on air, saving compressed air and energy
- Transparent housing for quick visual check of condensate level
- Needs no power supply
- 6 mm push-in outlet for quick connection

Applications

- Filter housing and separator drain points
- Air receivers and drip legs on compressed air mains
- Protecting downstream equipment and processes from condensate damage

Specifications

Ultramax Product Code	HAD500
Inlet	Rc 1/2"
Outlet	6 mm push-in
Max Working Pressure	1,600 kPa (16 bar, 232 psi)
Working Temperature (°C)	1.5 to 85
Initial Discharging Value (mL)	22
Largest Capacity (L/h)	84
Operation	Float ball, mechanical, no power
Housing	Transparent plastic bowl
Overall (mm)	79 wide x 112 high