Specification

Customer's Name: _____

Product Material No. : _____

Model No. : LF-GDE014YG

Version: V1.0

Customer Approval

Examined by	Reviewed by	Approved by

LIFUD Approval

Drafted by	Reviewed by	Approved by
Zhang Yuanyun	Liao Xinggao	Zhong Chunlin

Full Model Numbers Required by the Customer

Full model number		Full model number	
Full model number		Full model number	

E.C. List

Version	Description of Change	R&D	Date
0.1	Initial version	Lin Kaifan	2018-12-05
1.0	Formal version	Zhang Yuanyun	2019-04-26

Lifud Technology Co., Ltd.
Building F, Kutto Industrial Park, No.26 Xinhe Road, Xinqiao Street, Bao'an District, Shenzhen, China 518104
www.lifud.com | Technical support: +86 755 83739299 (Office hour: 08:30-18:00 on working days)

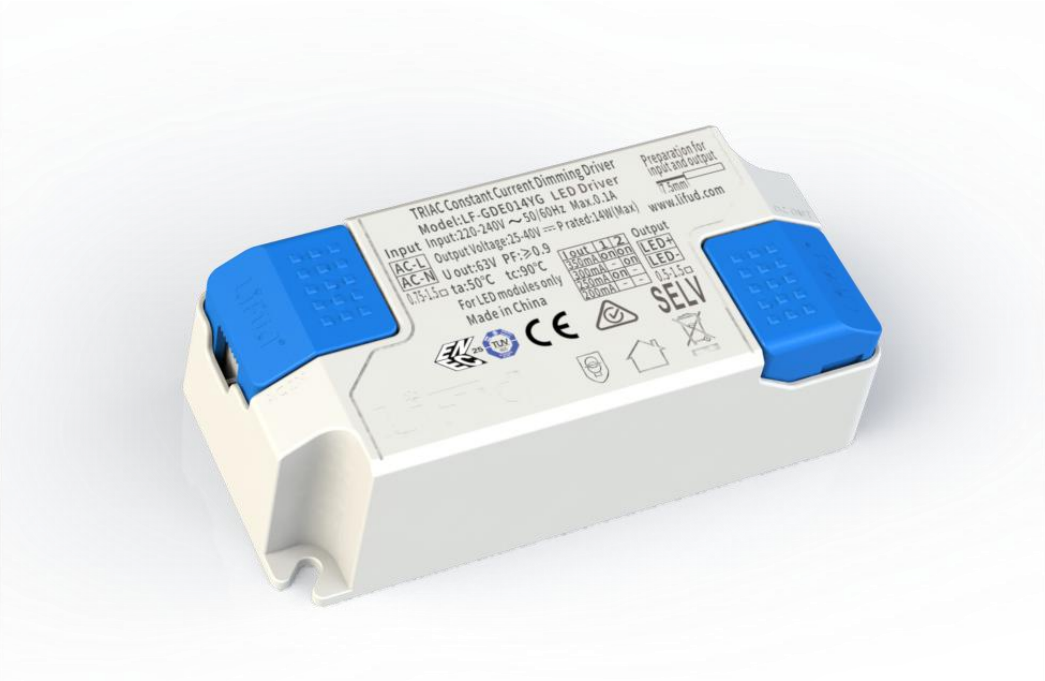

Product Description

LF-GDE014YG series is an 14W constant current LED power supply. Triac dimming. It's compatible with main trailing-edge dimmers in the market. The output current is adjustable from 200mA to 350mA via a DIP switch, 50mA per step. It's flicker free, even when it's dimming, which makes the light more comfortable for users.

Product Feature

- Constant current output, but can be adjusted via a DIP switch
- Plastic housing. Suitable for Class II light fixtures
- Triac dimming
- Flicker free, even when it's dimming
- Warranty: 5 years (Please refer to the warranty condition.)
- Multi-certificate: ENEC, CE, RCM, CCC

Application

- Down light
- Ceiling light

Technical Data

Full Model Number		LF-GDE014YG			
Output	Output Voltage	25-40V			
	Output Current	Output current can be adjusted via the DIP switch. Refer to DIP switch table.			
		200mA	250mA	300mA	350mA
	Ripple Voltage	<1V (20MHz)			
	Current Tolerance	±6%@230VAC			
	Temperature Drift	±10%			
	Line Regulation	±6%			
	Start-up Time	230V <0.5s			
Input	Line Regulation	±6%			
	Input Voltage	220-240VAC (voltage limit : 198-264VAC)			
	Input Frequency	47-63Hz			
	Input Current	0.1A Max.			
	Power Factor	≥0.9@230VAC (LED load)			
	THD	≤20%			
	Efficiency	≥79%/230VAC			
	Inrush Current	≤30A/350uS@230VAC (Max.)			
	Leakage Current	≤0.7mA			
	Stand-by Power	≤1W			
Protective Feature	Open Circuit Protection	≤63V (Restarting AC voltage is needed.)			
	Short Circuit Protection	Hiccup mode (Restarting AC voltage is needed.)			
Environment Condition	Working Temperature	-30℃ ~ +50℃			
	Working Humidity	20-90%RH (no condensation)			
	Storage Temperature/Humidity	-40℃ ~ 80℃(six months under class I environment); 10-90%RH (no condensation)			
	Atmospheric Pressure	86-106KPa			
Safety & Norm	Certification	(in progress) ENEC, CE, RCM, CCC			
	Withstand Voltage	I/P-O/P: 3.75KV, 5mA, 60s			
	Insulation Resistance	I/P-O/P: 500VDC, >100MΩ			
	Surge Rating	IEC61000-4-5 (L-N: 1KV)			
	Safety Standard	EN61347, GB19510			
	Electromagnetic Interference	EN55015, EN61000-3-2			
	Electro Magnetic Susceptibility	EN61000-4-2, 3, 4, 5, 6, 8, 11; EN61547			
Others	IP Rating	IP20			
	Warranty Condition	5 years (Tc: 75 ℃)			
Testing Equipment	AC power source: CHROMA6530, digital power meter: CHROMA66202, Oscilloscope: Tektronix DPO3014, DC electronic load: M9712B, LED board, constant temperature and humidity chamber, lightning surge generator: Everfine EMS61000-5B, rapid group pulse generator: Everfine EMS61000-4A, spectrum analyzer: KH3935, hi-pot tester: TH9201B, stroboscope (percent flicker tester) 60N-01, etc.				
Testing Condition	Unless otherwise stated, the parameters of the power factor and efficiency are the test results under the ambient temperature of 25℃ and humidity of 50%, AC input of 230V and 90% load.				
Additional Remark	1. It is recommended that customer should install protection devices for surge and for over & under voltage to ensure safety before connecting to electricity. 2. The PC cover, housing, end caps and other parts of the LED driver inside the LED light fixture must conform to UL94-V0 flammability standard or above. 3. As an accessory, the LED driver is not the only factor determining the EMC performance of the LED light fixture. The structure and the wiring of the light fixture are also relevant. Thus it's strongly recommended the LED light fixture manufacturer re-confirms the EMC of the whole LED light fixture.				

Circuit Breaker & Relevant Parameters

Name	Value	Remark
Surge peak current (Ipeak)	4A	Input voltage 230Vac
Surge half-peak time (Twidch)	65μs	Input voltage 230Vac, measure the time for Ipeak to drop to the half value.
Quantity of the same model driver that type-B 16A circuit breaker can configure.	106 pcs (Max.)	

Driver quantities are below if use another type of circuit breaker.

type	rank	relative driver quantities
B	10A	66
	13A	85
	16A	106
	20A	132
	25A	165
C	10A	110
	13A	143
	16A	180
	20A	220
	25A	275

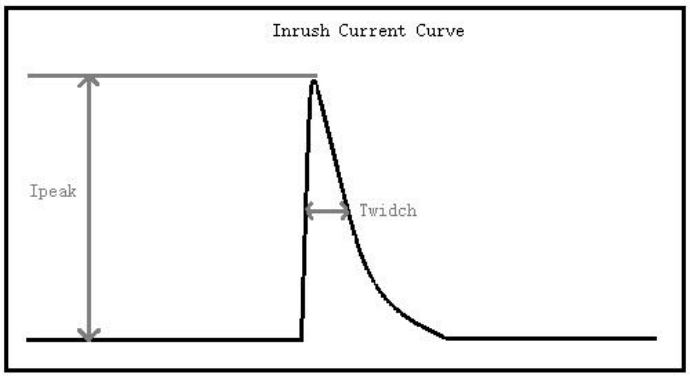

Function Diagram

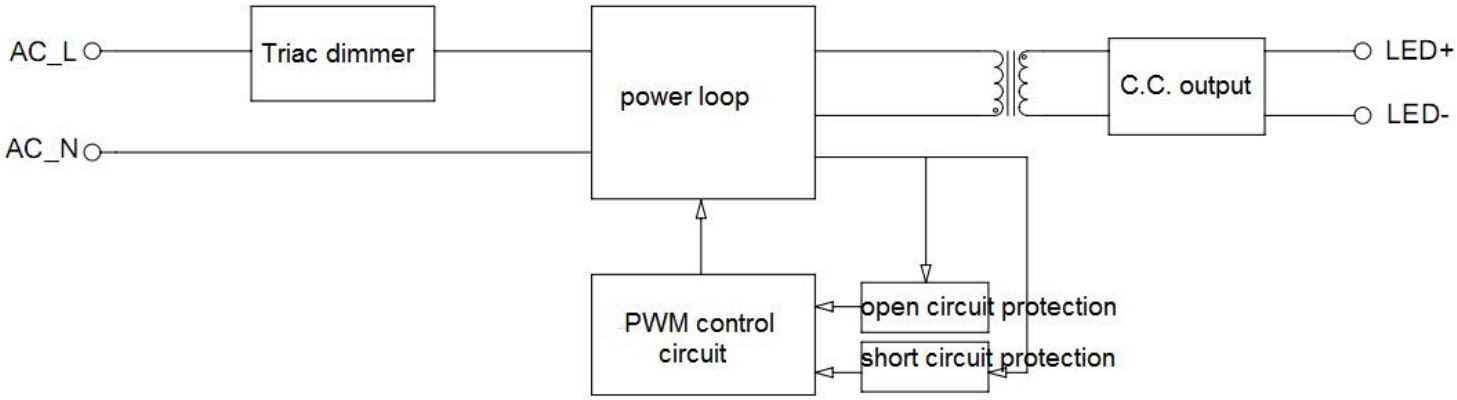

DIP Switch Table

DIP switch setting				
Ta	Vo DC	Current	1	2
50℃	25V — 40V	350mA	ON	ON
		300mA	—	ON
		250mA	ON	—
		200mA	—	—

Dimension (unit: mm, tolerance: +0.5mm)

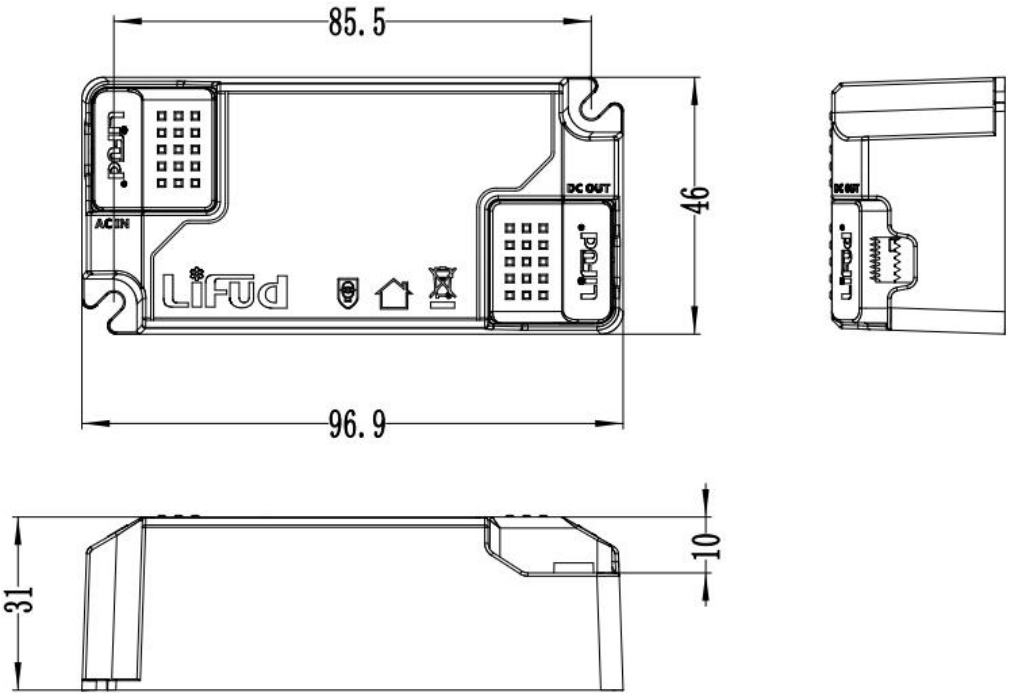

TC Spot (on the bottom cover)

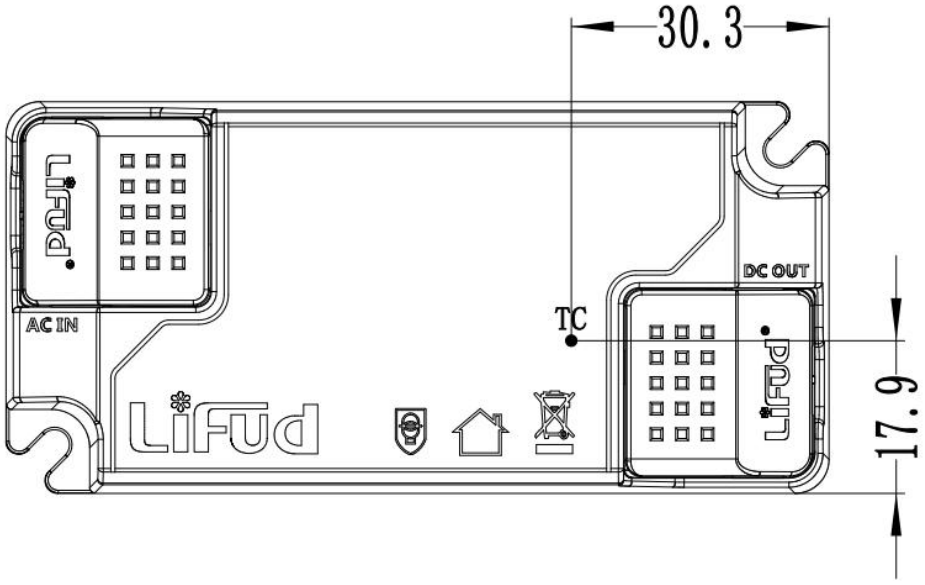

Packaging Specification

LF-GDE014YG	
carton dimension	
quantity	
weight	

Product Feature Curve

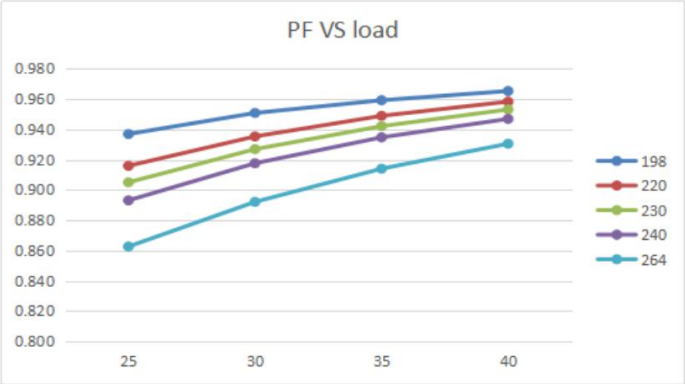

Lifetime Curve

The curve below illustrates the driver's lifetime data when the its max. case temperature in a confined space reaches 40℃, 50℃, 60℃, 70℃ and 80℃.

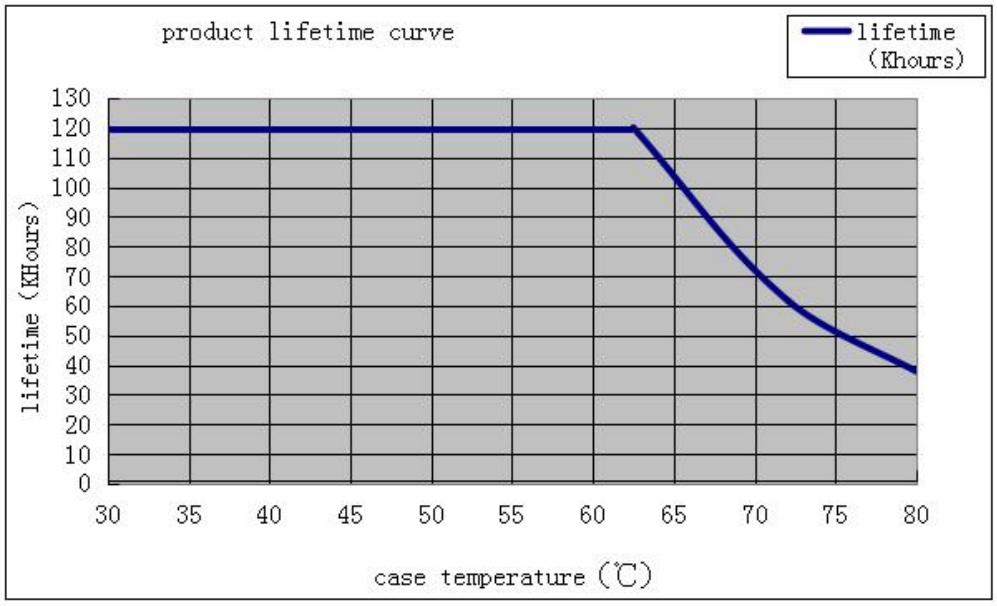

Dimming Curve

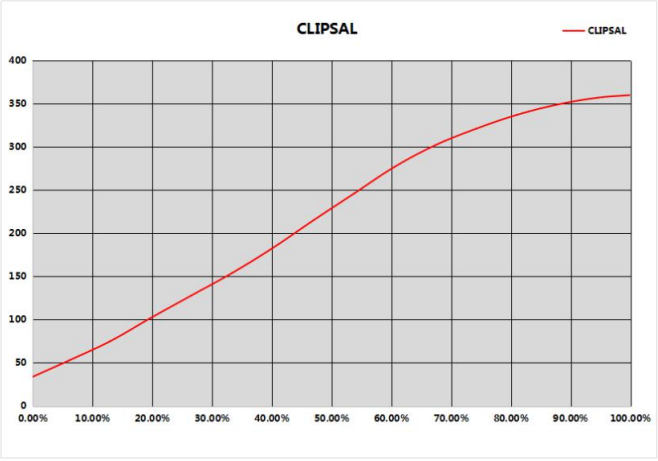

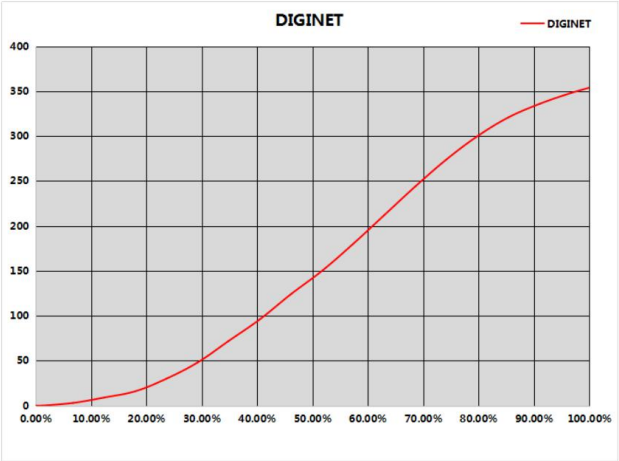

Dimmer models that this driver is compatible with:

- CLIPSAL: 32E450UDM
- DIGINET: MEDM

Wiring diagram

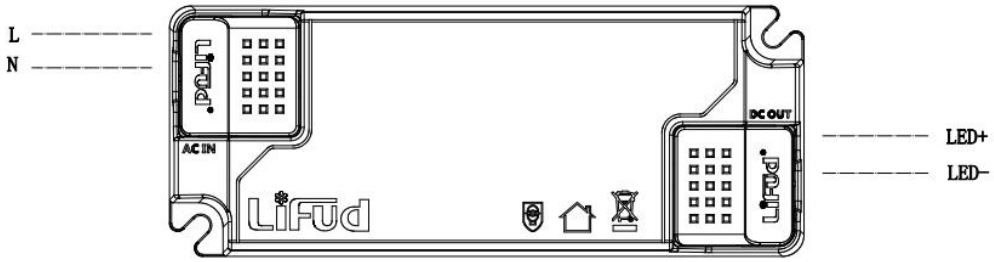

Product Label

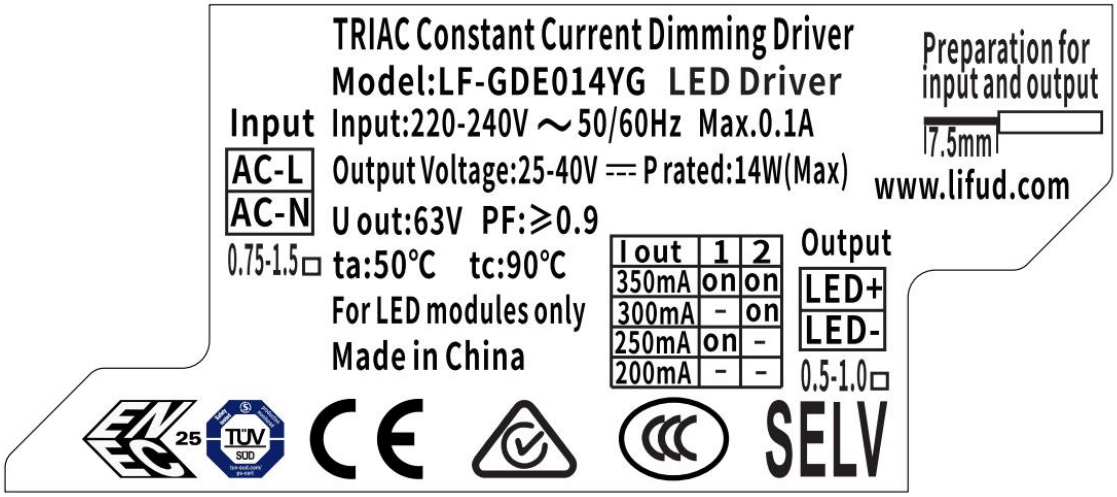

Remark: The final interpretation right of contents of this data sheet belongs to Lifud Technology Co., Ltd.