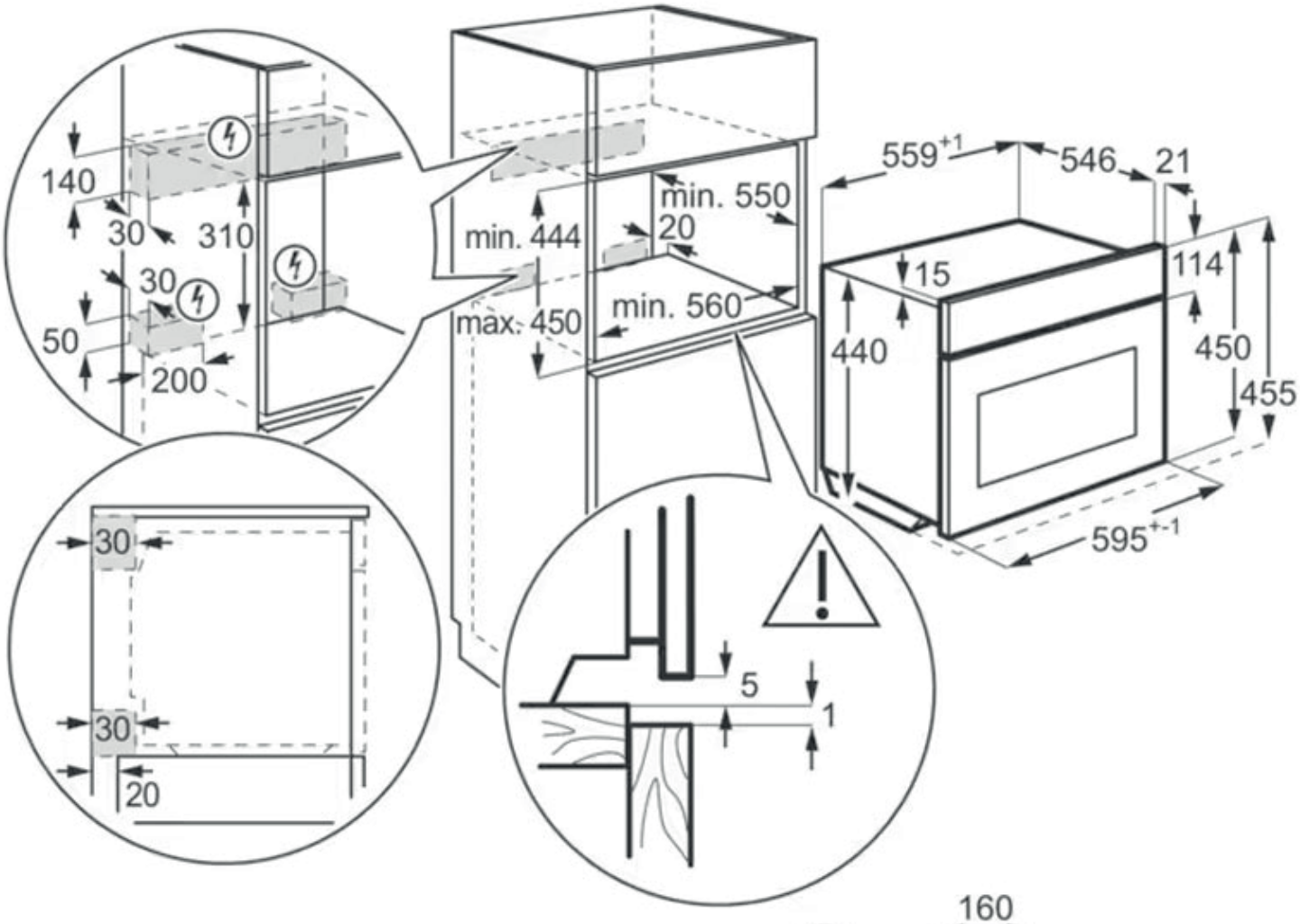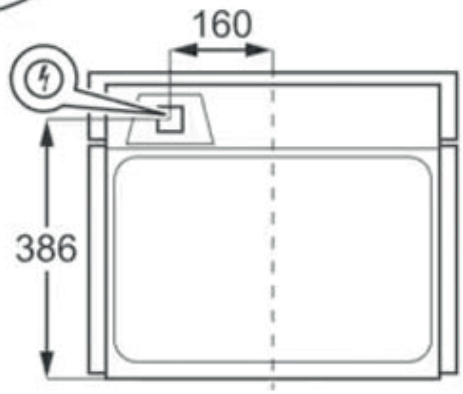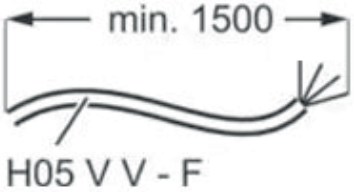PSGBOV180DE0000H