PSGBOV180DE0000F

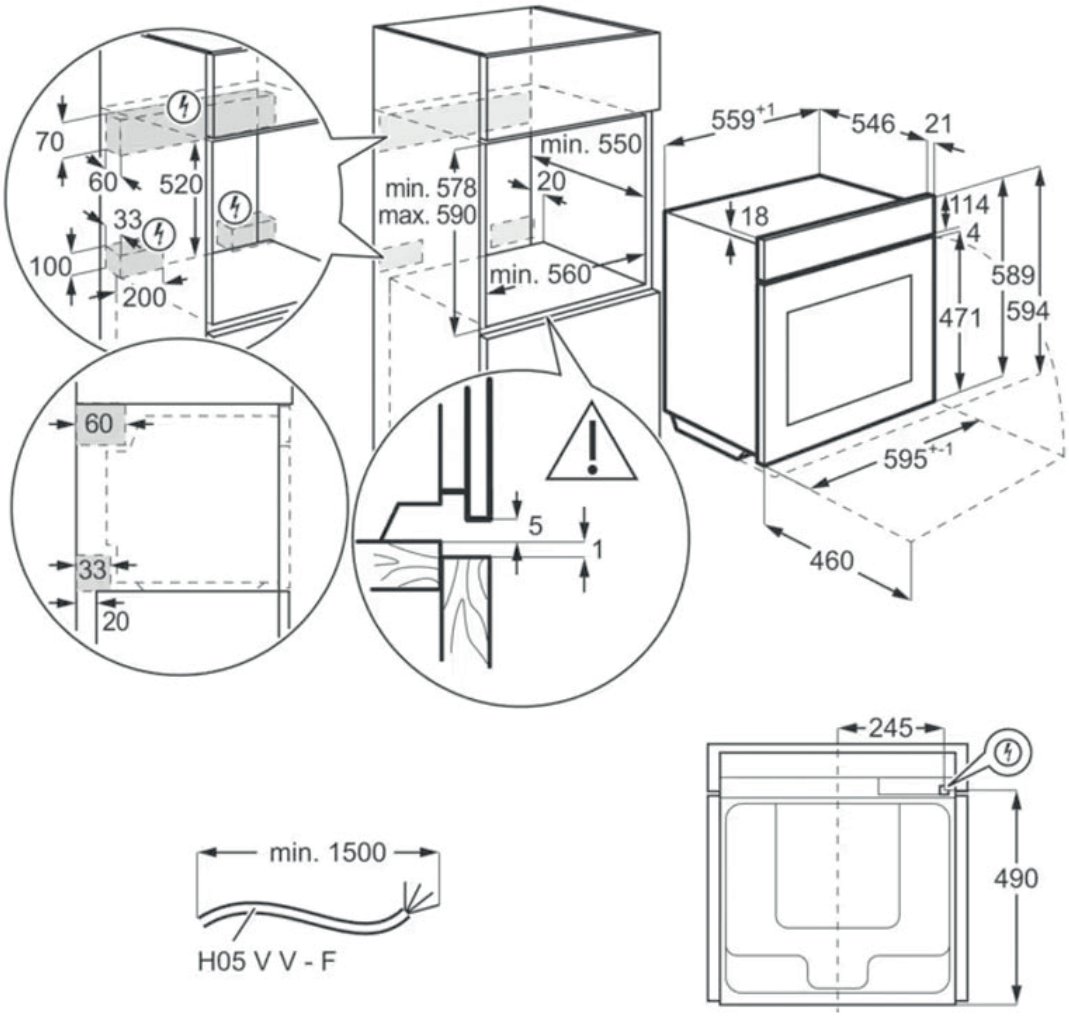
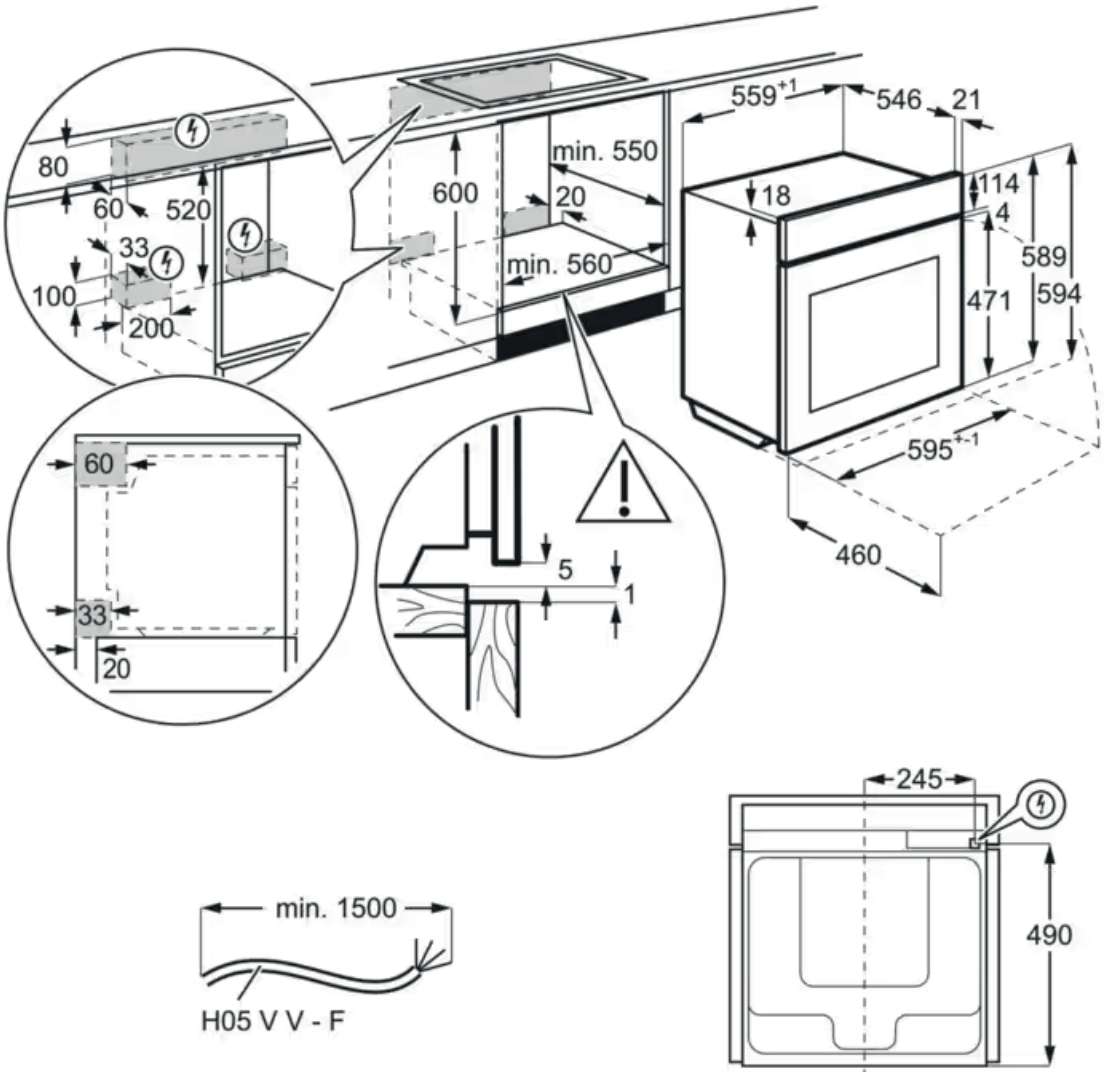
PSGBOV180DE0000G