PSGBOV230DE00001

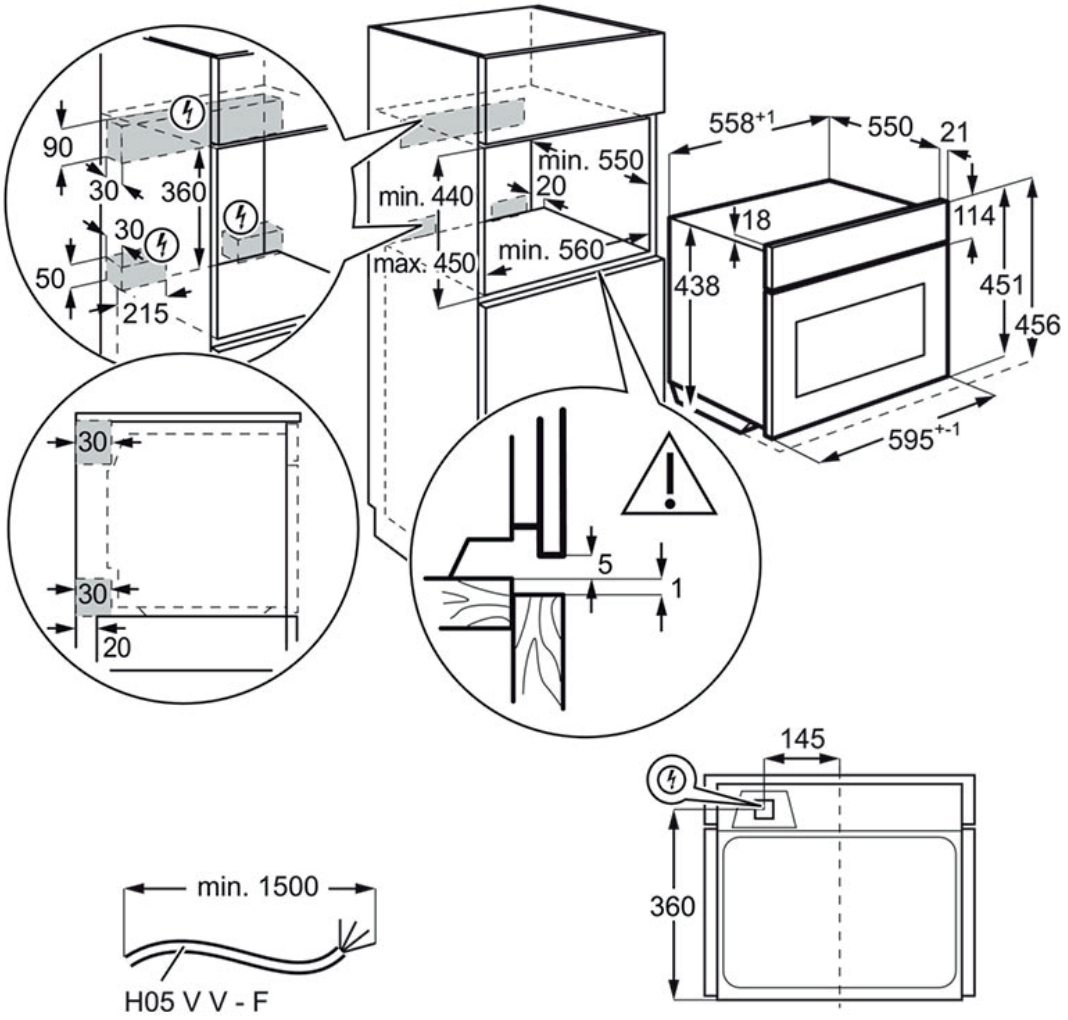
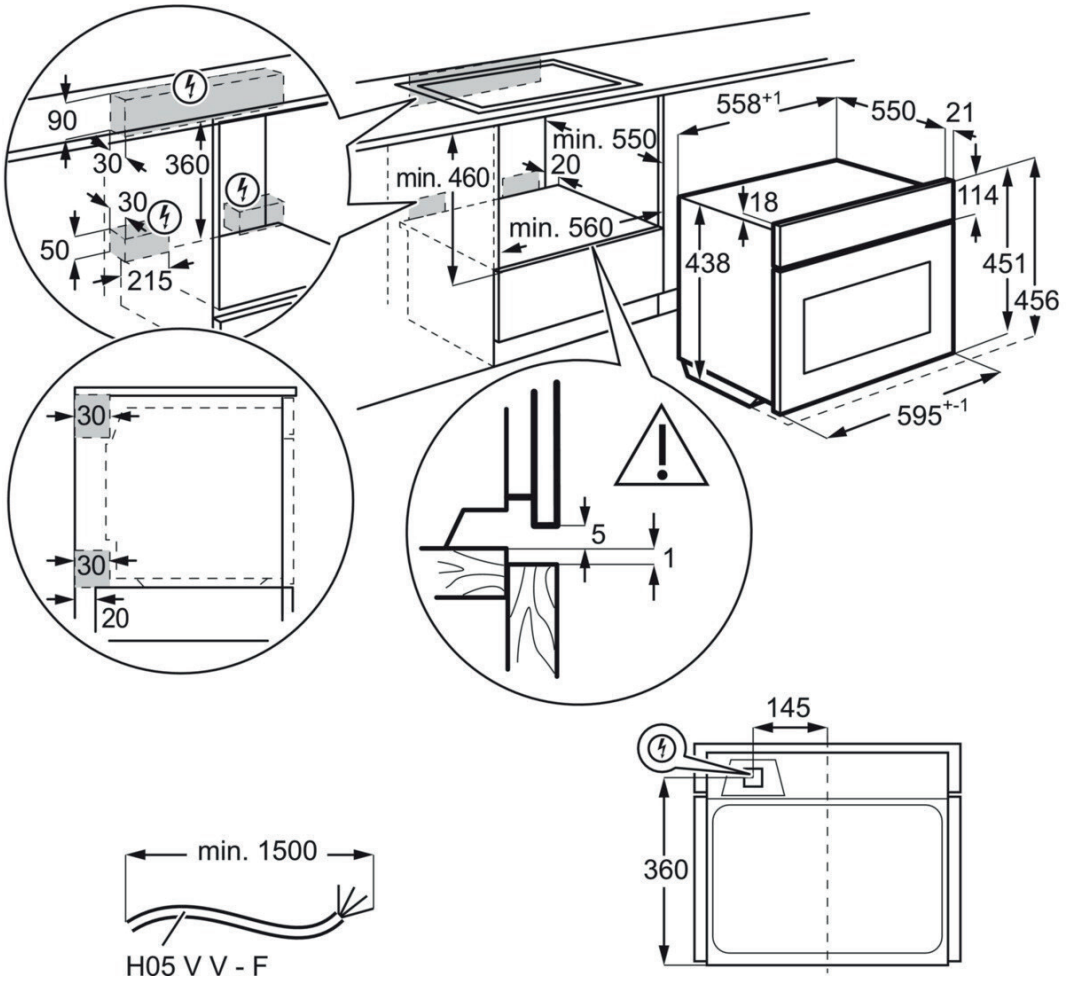
PSGBOV230DE00002