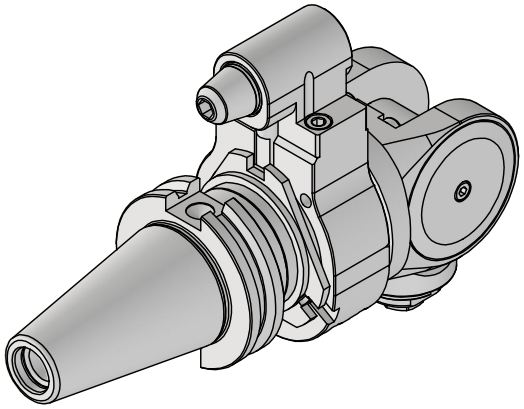

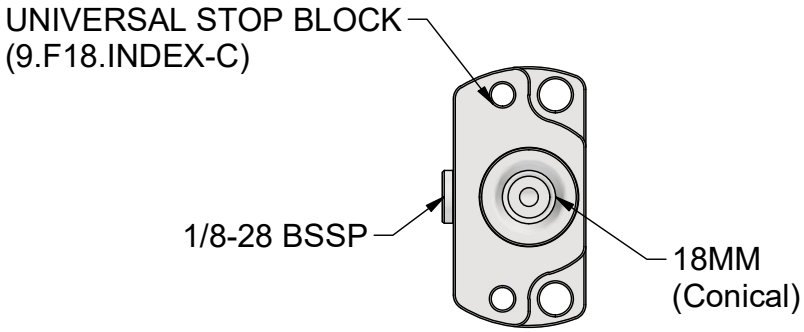

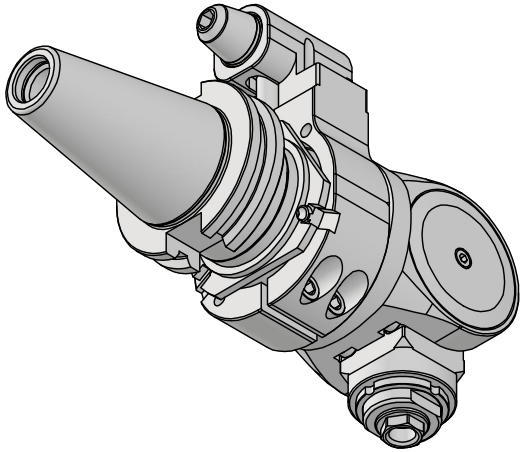

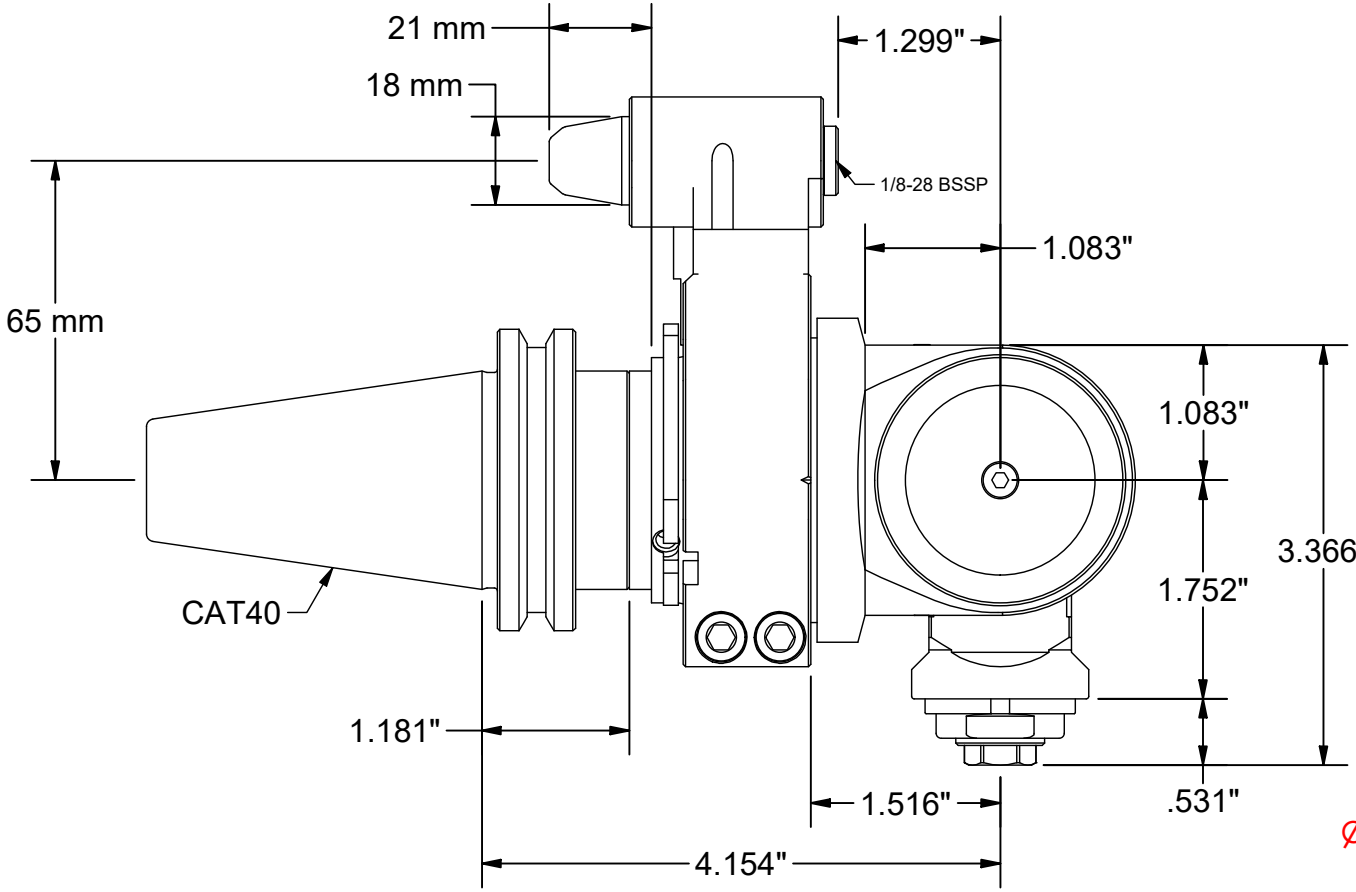

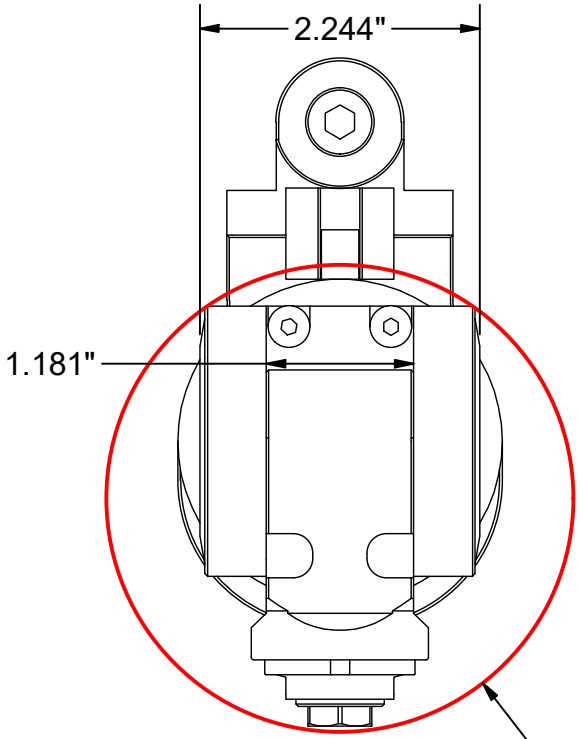

Ø3.740 **MINIMUM CLEARANCE CIRCLE**

OUTPUT: ER11 (ADJUSTABLE)
DIRECTION: OPPOSITE MACHINE SPINDLE
MAX RPM: 8,000
RATIO: 1:1
WEIGHT: 5.5 lbs

PART NUMBER 9.FLU.07000-0C40

PARLEC
(800) TOOL USA
WORLD HEADQUARTERS
101 PERINTON PARKWAY
FAIRPORT, NEW YORK 14450