Oxo sq dimm recessed

recessed

4459-D, 4460-D

12W

BENEITO FAURE®
passion for led light

Instrucciones de montaje/ Assembly instructions/ Instructions de montage/ Montageanleitung/ Istruzioni di montaggio

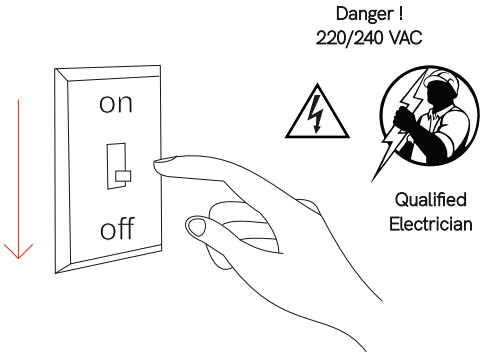

1.0

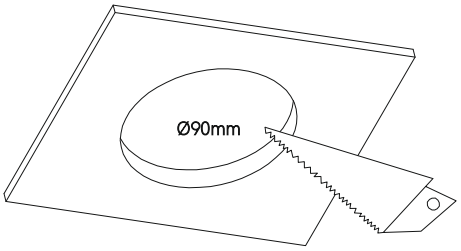

2.0

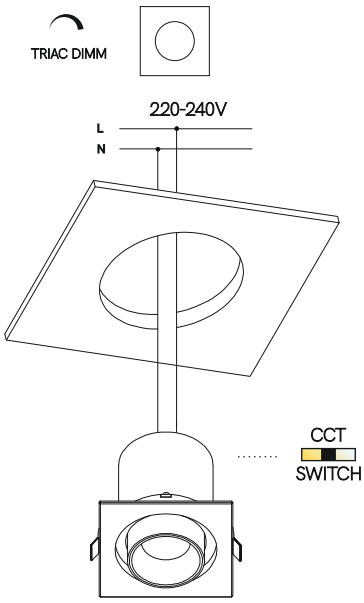

3.0 Disconnect the mains power before operating the power or CCT selection switch.

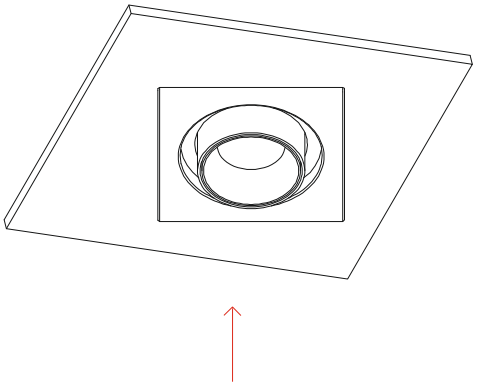

4.0

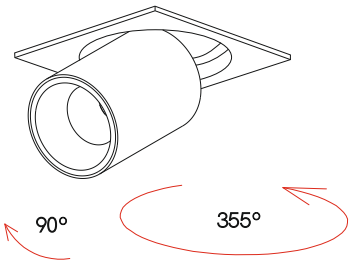

5.0

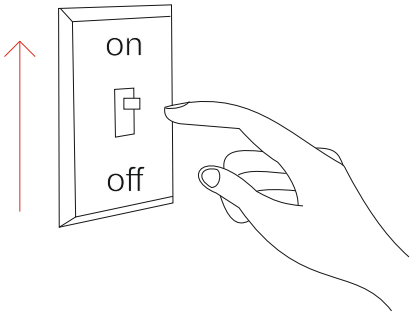

6.0

CE RoHS >0,9 PF CRI ≥80 15° 38° 60° 2.700K 3.200 K 4.000K CCT SWITCH 3 YEARS WARRANTY 220/240 VAC 50/60 Hz +50°C -20°C UGR <14 20 IP 30.000 HOURS TRIAC DIMM

Políg. Valldoriolf C/Thomas Edison 4-6 08430 La Roca del Vallés (Barcelona) Spain Tel.: 00 34 93.568.40.45 www.beneito-faure.com B-63378673 WEEE DE98004440