Volt r 48V

magnet track

5037, 5038

8W

BENEITO FAURE®
passion for led light

Instrucciones de montaje/ Assembly instructions/ Instructions de montage/ Montageanleitung/ Istruzioni di montaggio

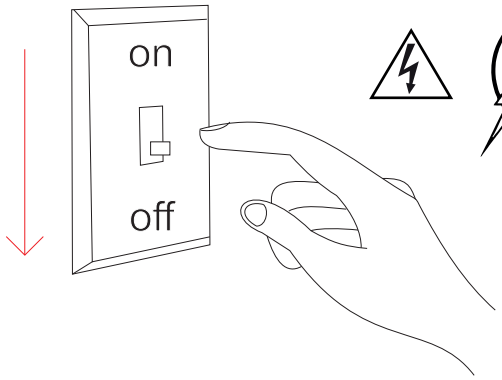

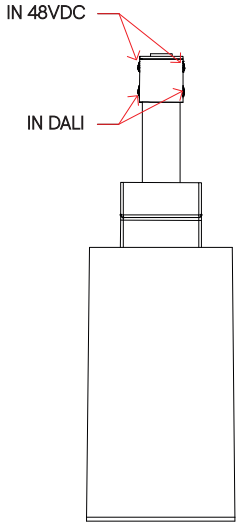

1.0 2.0

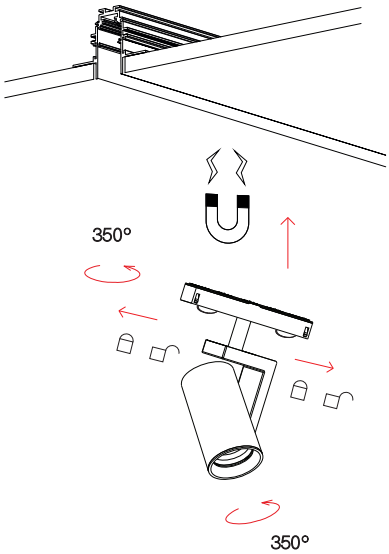

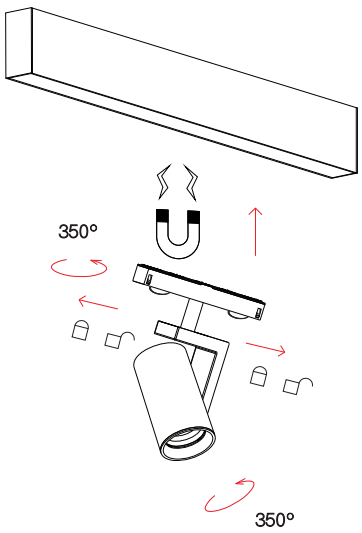

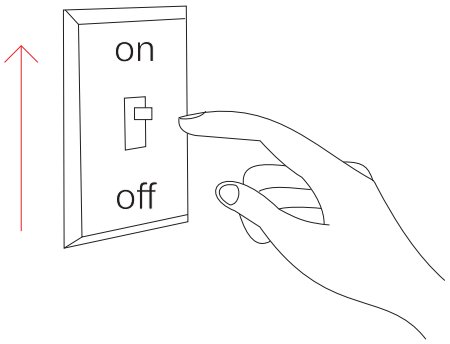

3.0 4.0 5.0

CE RoHS CRI ≥90 38° DALI 2 IK06 2.700K 4.000K 48V DC 3 YEARS WARRANTY 30.000 HOURS +45°C -20°C 20 IP

Políg. Valldoriolf C/Thomas Edison 4-6 08430 La Roca del Vallés (Barcelona) Spain Tel.: 00 34 93.568.40.45 www.beneito-faure.com B-63378673 WEEE DE98004440