TEKA
TECHNIK & KÜCHE

60cm 9 Function Oven with Hydroclean®

MODEL: HSB 543 SS

Features
80L gross oven capacity
9 functions
Fingerprint proof stainless steel
Hydroclean® cleaning system
Minute minder timer
Chromed supports w. telescopic guide
Interior light & cooling fan
Stainless steel w. black cover knobs
Chromed supports w. telescopic guide
Triple glazed glass door
Easy to remove door system
A+ European energy class
Deep tray & cooking grid

9 × Functions
› Fan-Forced
› Grill + Bottom
› Grill
› Bottom Heat (Pastry)
› Bottom Heat + Fan
› Eco Mode
› Defrost
› Light
› Hydroclean®

Product Dimensions
Packaged (w, d, h mm)
› 635 × 655 × 650
Physical (w, d, h mm)
› 595 × 559 × 595
Weight (Net/Gross)
› 28kg / 30kg

Warranty
5 years (3+2 on registration)

Cleaning
Easy to remove inner door glass
Easy to remove door
Crystal clean enamel to oven interior
Fingerprint proof stainless steel
Hydroclean® cleaning system

Requirements
Rated Power: 220–240V
Maximum Power: 2615W
Installation: Hard-wired
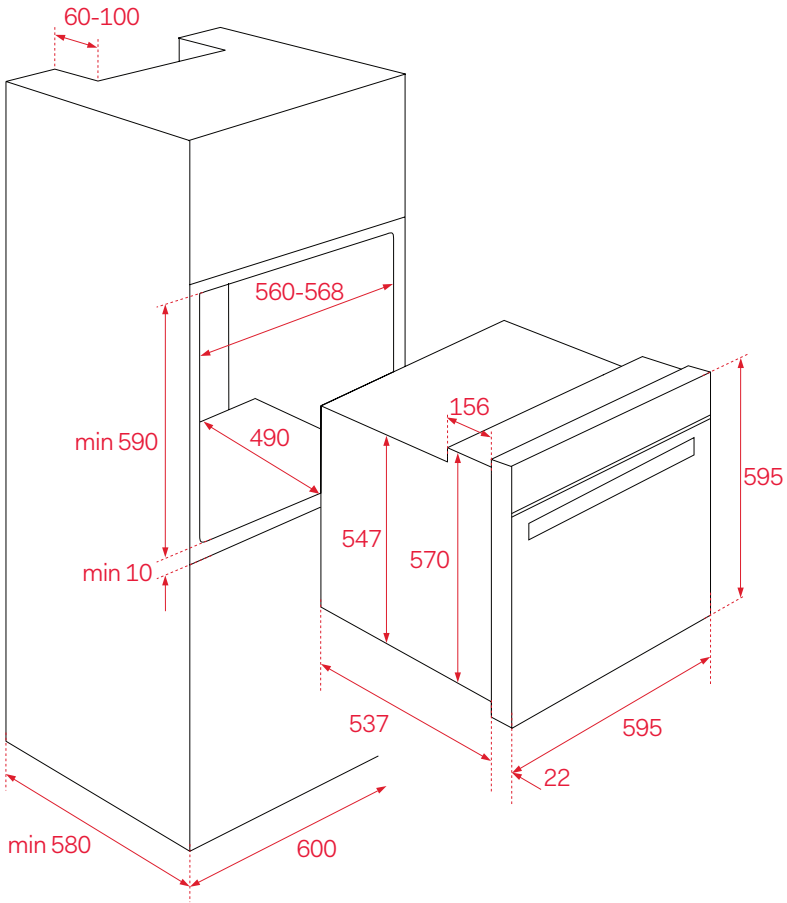
Below: Installation