User Manual EN

WMI 40741 W SP
WMI 40841 W SP
WMI 4094A W SP

www.teka.com

THANK YOU LETTER

Thank you for choosing TEKA! Before using your new TEKA product, please read this manual thoroughly to ensure that you know how to operate the features and functions that your new appliance offers in a safe way.

CONTENTS

THANK YOU LETTER 01
SAFETY INSTRUCTIONS 02
SPECIFICATIONS 06
PRODUCT OVERVIEW 07
QUICK START GUIDE 08
PRODUCT INSTALLATION 11
OPERATION INSTRUCTIONS 15
CLEANING AND MAINTENANCE 33
TROUBLE SHOOTING 37
DISPOSAL AND RECYCLING 38
WARRANTY CARD 39
BUILT-IN INSTALLATION 41

Read all instructions and explanations before use. Follow the instructions carefully. Keep the operation instructions handy for later use. If the appliance is sold or passed on then ensure that the new owner always receives these operation instructions.

SAFETY INSTRUCTIONS

Safety Instructions

Please read the following safety information thoroughly and follow it strictly to minimize the risk of fire or explosion, electric shock and to prevent property damage, personal injury or loss of life. Failing to follow these instructions shall void any warranty.

- Children should be supervised that they do not play with the appliance.
- If the supply cord is damaged, it must be replaced by the manufacturer, its service agent or similarly qualified persons in order to avoid a hazard.
- Max. Inlet water pressure 1 MPa. Min. inlet water pressure 0.05 MPa.
- The new hose-sets supplied with the appliance are to be used and that old hose-sets should not be reused.
- This appliance is intended to be used in household and similar applications such as:
  -Staff kitchen areas in shops, offices and other working environments;
  -Farm houses;
  -By clients in hotels, motels and other residential type environments;
  -Bed and breakfast type environments;
- Do not install the machine on a carpet floor.
- The obstruction of the openings by a carpet can damage the machine.

Model	Washing Capacity
WMI 40741 W SP	7.0kg
WMI 40841 W SP	8.0kg
WMI 4094A W SP	9.0kg

For countries other than EU:

- The appliance is not to be used by persons (including children) with reduced physical, sensory or mental capabilities, or lack of experience and knowledge, unless they have been given supervision or instruction.
- Children being supervised not to play with the appliance.

For use in EU countries:

- This appliance can be used by children aged from 8 years and above and persons with reduced physical, sensory or mental capabilities or lack of experience and knowledge if they have been given supervision or instruction concerning use of the appliance in a safe way and understand the hazards involved.
- Children does not play with the appliance.
- Cleaning and user maintenance are not made by children without supervision.
- Children of less than 3 years are kept away unless continuously supervised.

-Areas for communal use in blocks of flats.

Explanation of Symbols

	DANGER This symbol indicates that there are dangers to the life and health of persons due to extremely flammable gas.
	WARNING OF ELECTRICAL VOLTAGE This symbol indicates that there is a danger to life and health of persons due to voltage.
	WARNING The signal word indicates a hazard with a medium level of risk which, if not avoided, may result in death or serious injury.
	CAUTION The signal word indicates a hazard with a low degree of risk which, if not avoided, may result in minor or moderate injury.
	NOTE The signal word indicates important information (e.g. damage to property), but not danger.
	OBSERVE INSTRUCTIONS This symbol indicates that a service technician should only operate and maintain this appliance in accordance with the operating instructions.

WARNING: Electric Shock Hazard

- If the machine is damaged, it must not be operated unless repaired by the manufacturer, its service agent or similarly qualified persons.
- Risk of electric shock!
- Animals and children may climb into the machine. Check the machine before every operation.
- Do not climb or sit on the appliance.

Installation Location and Surrounding

- All washing and additional substances are to be kept in a safe place out of the reach of children.
- Keep the appliance clear from heating sources and direct sunlight to avoid plastic and rubber parts to corrode.
- Do not use the appliance in humid environments or rooms containing explosive or caustic gas. In case of water leakage or water splashes, let the appliance dry in the open air.
- The appliance must not be installed behind a lockable door, a sliding door or a door with a hinge on the opposite side to that of the machine .
- Do not operate the machine in rooms with a temperature of below 5°C. This can cause damages to parts of it. If it is unavoidable, make sure to drain the water completely from the appliance after every use (see“Maintenance - Cleaning of drain pump filter”) to avoid damages caused by frost.
- Never use flammable sprays or substances in the immediate proximity of the appliance.

Installation

- Remove all packaging material and transport bolts before using the appliance. Otherwise, serious damage may result.
- This appliance is equipped with a single inlet valve and can be connected to the cold water supply only.
- Mains plug must be accessible after installation.
- Before washing clothes for the first time, the product shall be operated once throughout all the procedures without any clothes inside.
- Before using the machine, the product shall be calibrated.
- Do not put any excessively heavy objects on the appliance, like water containers or heating devices.

Electrical Connection

- Make sure the supply cable is not trapped by the machine, or it can get damaged.
- Connect the product to a grounded outlet protected by a fuse complying with the values in the "Technical specifications” table. The grounding installation has to be made by a qualified electrician. Ensure that the machine is installed in accordance with the local regulations.
- Water and electrical connections must be carried out by a qualified technician in accordance with the manufacturer's instructions and local safety regulations.

⚠ WARNING:

- Don´t use multiple plugs or extension cords.
- The appliance must not have an external switching device such as a timer or connected to a circuit that is regularly switched on and off.
- Do not pull the plug out of the mains outlet if there is flammable gas around.
- Never pull out power plug with wet hands.
- Always pull at the plug, not at the cable.
- Always unplug the appliance if it is not being used.

Water Connections

- Check the connections of the water inlet tubes, the water tap and the outlet hose for possible problems due to changes of water pressure. If the connections loosen or leak, close the water tap and get it repaired.
- Do not use the appliance before the pipes and hoses are installed properly by qualified persons.
- Glass door may become very hot during the operation. Keep children and pets far away from the machine while it is operating.
- The water inlet and outlet hoses have to be safely installed and remain undamaged.
- Otherwise, water leakage can occur.
- Do not remove the drain pump filter while there is still water in the appliance. Big quantities of water can leak out, and there is a risk of scalding due to hot water.

Operation and Maintenance

- Never use any flammable, explosive or toxic solvents. Do not use gasoline and alcohol etc. as detergents. Only select detergents that are suitable for machine washing.
- Make sure that all pockets are emptied. Sharp and rigid items such as coins, brooches, nails, screws, stones etc. may cause serious damages to this machine.
- Remove all objects from pockets such as lighters and matches before use the appliance. Thoroughly rinse items that have been washed by hand.
- Items that have been soiled with substances such as cooking oil, acetone, alcohol, petrol, kerosene, spot removers, turpentine, wax and wax removers should be washed in hot with an extra amount of detergent before being dried in the appliance.
- Items containing foam rubber (latex foam), shower caps, water proof textiles, rubber backed articles and clothes or pillows fitted with foam rubber pads should not be washed in the machine.
- Fabric softeners or similar products should be used are recommended in their instructions.
- Never try to open the door forcefully.
- The door will unlock shortly after the end of a cycle.
- Please do not close the door with excessive force. If it is found difficult to close the door, please check if the clothes are properly inserted and distributed.
- Always unplug the appliance and close the water tap before cleaning and maintenance and after each use.
- Never pour water over the appliance for cleaning purpose. Risk of electric shock!
- Repairs shall only be carried out by the manufacturer, its service agent or similarly qualified persons in order to avoid a hazard.
- The producer will not be responsible for damages caused by the intervention of not authorized persons.

Transport

- Before Transport:
  -Bolts shall be reinstalled to the machine by a specialized person;
  -Accumulated water shall be drained out of the machine.
- This appliance is heavy. Transport with care. Never hold any protruding part of the machine when lifting. The machine door can not be used as a handle.

SPECIFICATIONS

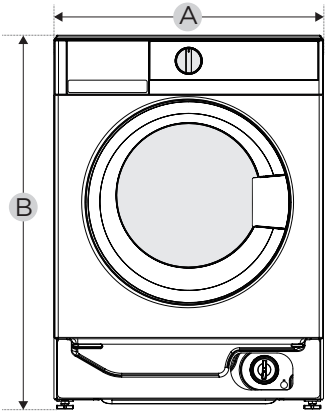

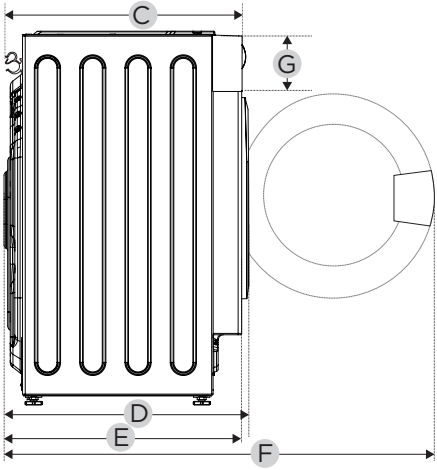

Model	WMI 40741 W SP	WMI 40841 W SP	WMI 4094A W SP
Power Supply	220-240V~,50Hz		
MAX. Current	10A		
Standard Water Pressure	0.05MPa~1MPa		
Washing Capacity	7.0kg	8.0kg	9.0kg
Dimension			
A	595mm	595mm	595mm
B	825mm	825mm	825mm
C	535mm	535mm	560mm
Weight	60kg	60kg	60kg
Rated Power	1950W	1950W	1950W
Reference Dimension			
D	540mm	540mm	565mm
E	521mm	521mm	546mm
F	985mm	985mm	1010mm
G	135mm	135mm	135mm

PRODUCT OVERVIEW

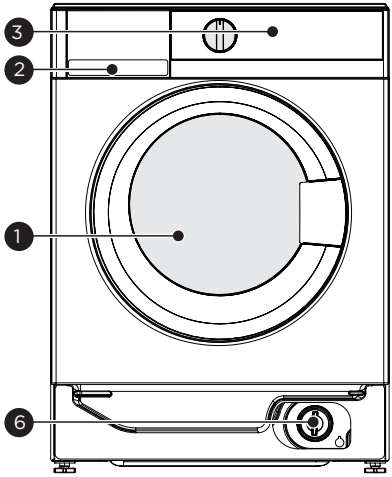

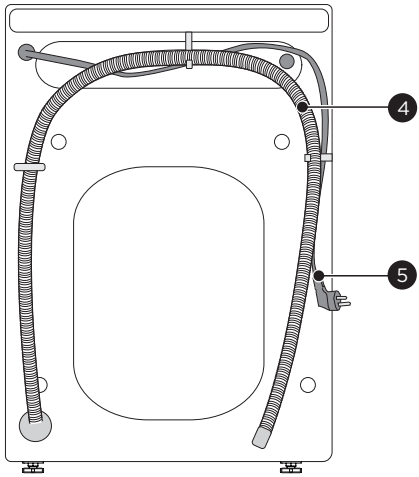

1	Door	4	Drain hose
2	Detergent dispenser	5	Power supply cord
3	Control panel	6	Service flap

NOTE

The product picture is for illustration only, please refer to real product as reference.

Accessories

4 x Cover caps	1 x Supply hose cold water	1 x Owner's manual
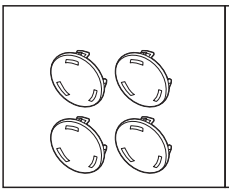	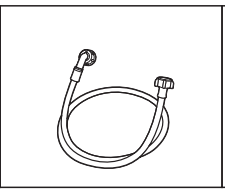	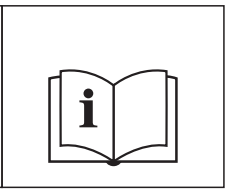

QUICK START GUIDE

⚠ CAUTION

- Before washing, please make sure the machine is installed properly.
- Your appliance was thoroughly checked before it left the factory. To remove any residual water and to neutralize potential odors, it's recommended to clean your appliance before first use. For this reason, recommended to clean the inner drum by running the "DRUM CLEAN" or other program with the optional temperature of 90°C. Be careful not to put laundry and detergent in the machine.

⚠ Calibration

It's recommended to calibrate the machine, so that provide the best performance. The appliance is able to detect the amount of laundry loaded. This function is optimizing the product performance by minimizing energy and water consumption, saving you money and time. For this reason it's recommended to calibrate the appliance for best use.

1- Remove all accessories from the drum and close the door;

2- Insert the mains plug to the socket;

3- Switch on the washing machine, and within 10 seconds, press "Temp." and "Steam" simultaneously and continuously (normally 3 seconds) until "t19" is displayed.

4- Press ▷|| to start the appliance, initially"***" is displayed, and then "***" (such as "126") is displayed to indicate the real time drum speed.
If the machine is successfully calibrated, "PAS" will be displayed, otherwise, "FAL" will be displayed.

1. Before Washing

1. Plug in

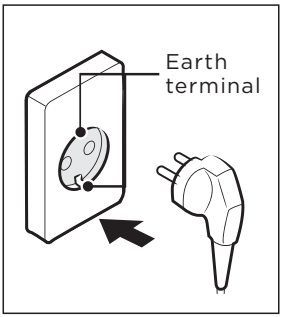

2. Open tap

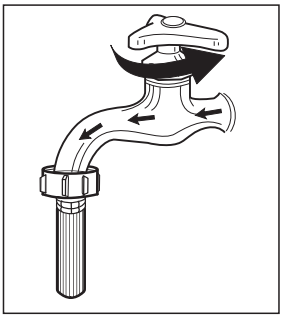

3. Load

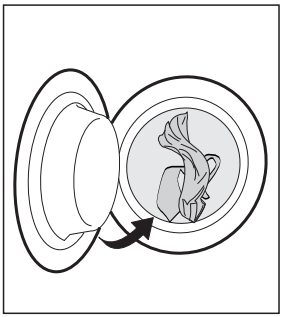

4. Close door

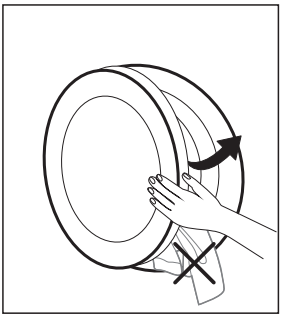

5. Add detergent

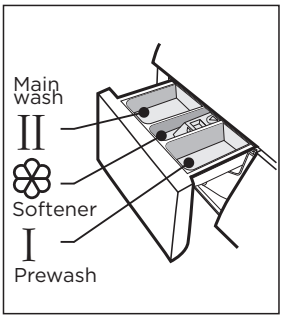

NOTE

- The picture is reference only, please refer to real product as standard.
- Detergent need to be added in compartment I if the pre-wash function is selected.
- When closing the door, please make sure that your clothes are not caught between the sealing ring and the machine door to prevent water leakage caused by pulling and damaging the sealing ring during operation.

2. Washing

1. Select programme

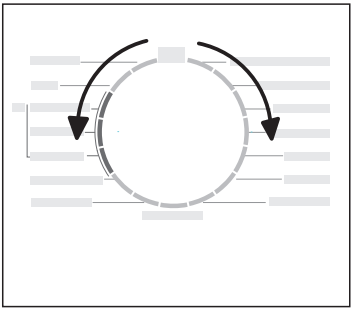

2. Select function or remain default settings

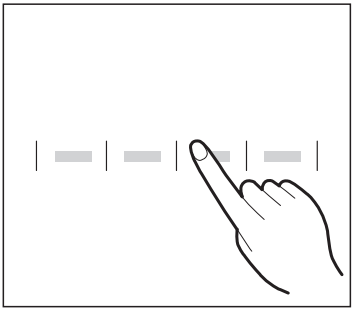

3. Press Start/Pause to start the program

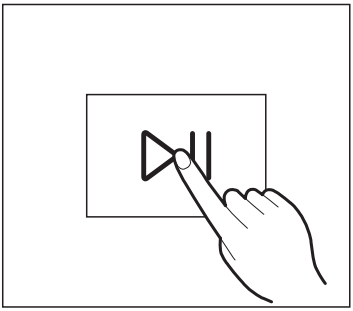

NOTE

1 : If default is selected, step 2 can be skipped.
2: The function button line chart is for reference only, please refer to real product as standard.

3. After Washing

Buzzer beep and “End” on display.

PRODUCT INSTALLATION

Tools Needed If Installation By Yourself (not include)

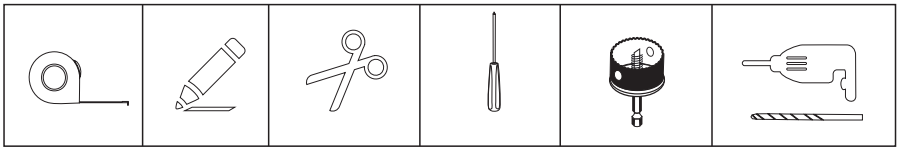

Installation Area

WARNING

- Stability is important to prevent the product from wandering!
- Make sure the machine is standing leveled and stable.
- Make sure that the product does not stand onto the power cord.
- Make sure to maintain the minimum distances from the walls as shown in the picture.

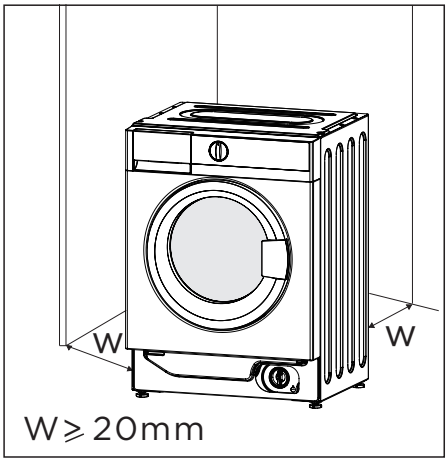

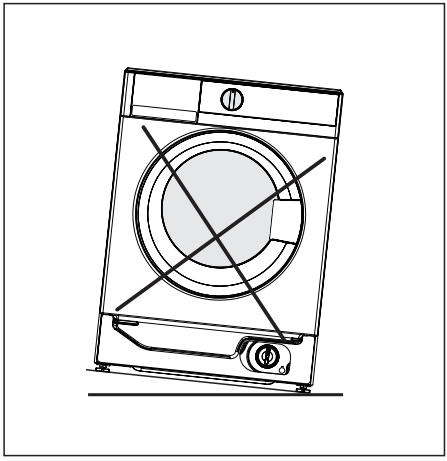

Before installing the machine, the location characterized as follows shall be selected:

1. Rigid, dry, and level surface.
2. Avoid direct sunlight.
3. Sufficient ventilation.
4. Room temperature is above 5 °C .
5. Keep far away from the heat sources such as coal or gas burning appliances.

Unpacking the Machine

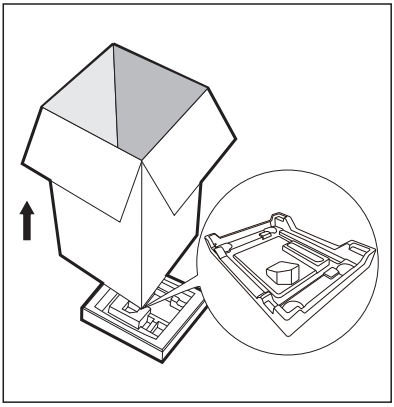

WARNING

- Packaging material (e.g. Films, Styrofoam) can be dangerous for children.
- There is a risk of suffocation ! Keep all packaging well away from children.

1. Remove the cardboard box and styrofoam packing.
2. Lift the machine and remove the base packaging.
3. Remove the tape securing the power supply cord and drain hose.
4. Remove the inlet hose from the drum.

Remove Transport Bolts

WARNING

You must remove the transport bolts from the backside before using the product.

1. Loosen the 4 transport bolts with a spanner.

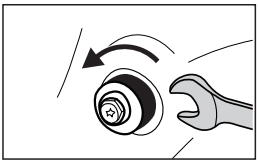

2. Remove the bolts including the rubber parts and keep them for future use.

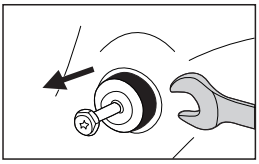

3. Close the holes using the cover caps.

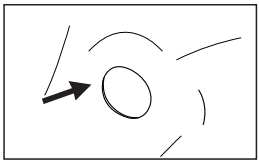

Levelling the Machine

WARNING

The lock nuts on all four feet must be screwed tightly against the housing.

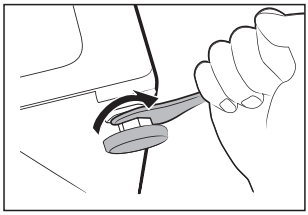

1. Loosen the lock nut.
2. Turn the foot until it reaches the floor.
3. Adjust the legs and lock the nuts with a spanner. Make sure the machine is level using a spirit level.

Connect the Water Supply Hose

WARNING

To prevent leakage or water damage, follow the instructions in this chapter.
• Do not kink, crush or modify water inlet hose.

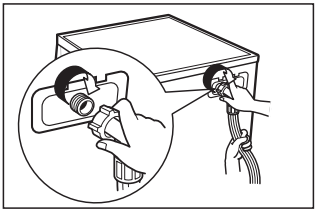

Connect the water supply hose to the water inlet valve and a water tap with cold water as indicated.

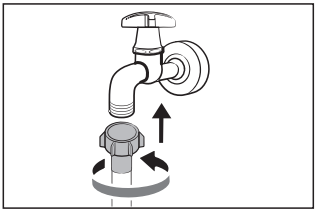

NOTE

• Connect manually, do not use tools. Check if the connections are tight.

Drain Hose

WARNING

• Do not kink or protract the drain hose.
• Position drain hose properly ,otherwise damage might result in water leakage.
• It is not allowed to remove the buckle of drain pipe.

There are two ways to place the end of drain hose:

1.Put it into the water trough.

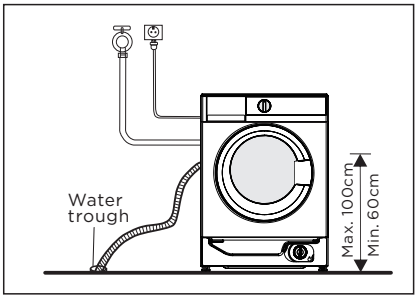

2.Connect it to the branch drain pipe of the trough.

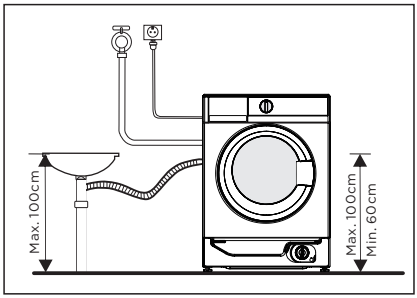

OPERATION INSTRUCTIONS

Before Each Washing

- The ambient temperature of the machine should be 5°C-40°C. If used under 0°C, the inlet valve and draining system may be damaged. If the machine is installed under freezing conditions, it should be transferred to normal ambient temperature to ensure the water supply hose and drain hose can unfreeze before use.
- Please check your laundry care labels and the detergent use instructions before wash. Use non-foaming or less-foaming detergent suitable for machine properly.

1. Take all items out of the pockets

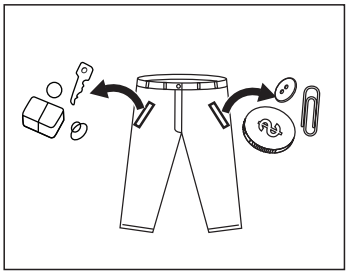

2. Sort laundry according to color and textile type

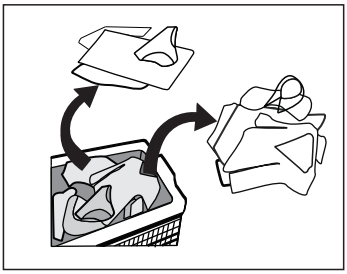

3. Tie together long textile strips and belts, close zips and button

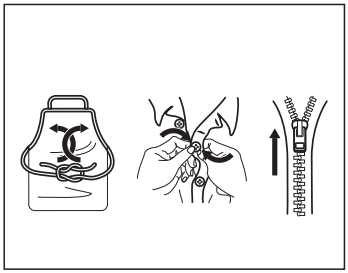

4. Put small items into a laundry bag

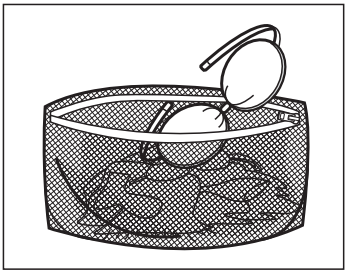

WARNING

- It is prohibited to wash clothes that adhere to any volatile or flammable substance such as cleaning agent, dry cleaning agent, spot remover, acetone, gasoline, kerosene, beauty oil, massage oil, animal oil, machinery oil, dry cleaning oil, volatile agent, alcohol, turpentine, wax, wax remover, banana water, disinfectant tablets, resin, etc.
- Washing single clothes items may easily create big eccentricity. Therefore it is suggested to add one or two more laundry items to the wash so that spin can be done smoothly.
- Do not wash, spin water-proof seats, mats ,or clothing.

Detergent Dispenser

I Pre wash

II Main wash

❀ Softener

Release button to pull out the dispenser

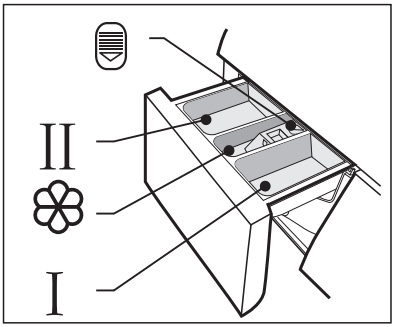

CAUTION

- The picture is reference only, please refer to real product as standard.
- Detergent only need to be added in “case I” after selecting pre-washing for machines with this function.
- Do not put laundry beads into the detergent dispenser.

Programme	I	II	❀	Programme	I	II	❀
SYNTHETIC	○	●	○	SPIN ONLY			
COTTON	○	●	○	JEANS	○	●	○
MIX	○	●	○	DUVET		●	○
BABY CARE	○	●	○	WOOL		●	○
20°C CARE+	○	●	○	ECO 40-60		●	○
PET HAIR REMOVAL	○	●	○	RAPID 59′		●	○
DRUM CLEAN				QUICK 15′		●	○

● Means must ○ Means optional

Detergent Recommendation

Recommended washing detergent	Type of laundry and textile	Wash cycles	Washing temp. °C
Heavy-duty detergent with bleaching agents and optical brighteners	White laundry made from boil-proof cotton or linen	COTTON, ECO 40-60	40/60
Colour detergent without bleaching agent and optical brighteners	Coloured laundry made from cotton or linen	COTTON	20/40
Color or mild detergent without optical brighteners	Coloured laundry made from easy care fibres or synthetic materials	COTTON, SYNTHETIC	20/40
Mild washing detergent	Delicate textiles, silk, viscose	SYNTHETIC	20
Special wool detergent	Wool	WOOL	20/40

NOTE

- Agglomerating or ropy detergent or additive can be diluted in some water before pouring it into the detergent dispenser, to avoid its inlet to get blocked and thus cause a water overflow.
- Please choose the suitable type of detergent to get a maximum of washing performance and a minimum of water and energy consumption.
- To achieve the best cleaning result a proper detergent dosing is important.
- Use a reduced detergent amount if the drum is not filled completely.
- Always adjust the amount of detergent to the water hardness, if your tap water is soft, use less detergent.
- Dose according to how dirty your laundry is, less dirty clothes require less detergent.
- Highly concentrated (compact detergent) requires particularly accurate dosing.

Following symptoms are a sign of detergent overdosing:
- heavy foam formation
- poor washing and rinsing result

Following symptoms are a sign of detergent under dosing:
- laundry turns grey
- built-up of limescale deposits on the drum, the heating element and/or the laundry

Control Panel

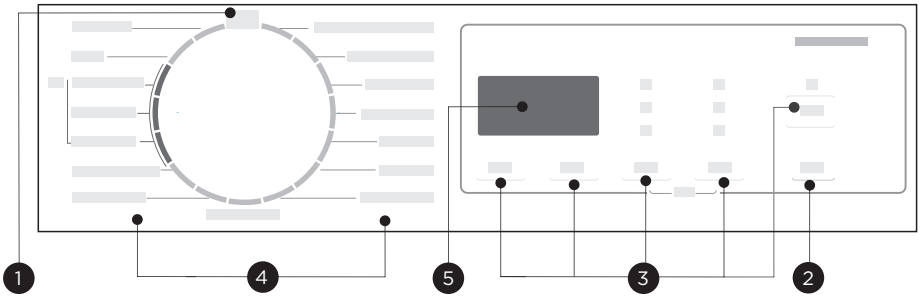

1 OFF

Turn the appliance off.

2 Start/Pause

Start or pause your programme.

3 Option

This allows you to select additional functions.

4 Programmes

Available according to the laundry type.

5 Display

The display shows settings, estimated remaining time, options and status messages.

NOTE

- The Chart is reference only, please refer to real product as standard.

Display

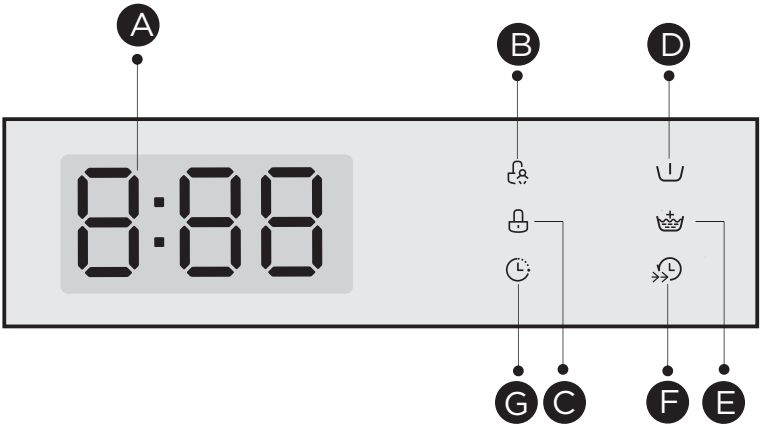

A Display	
Wash Time 125 Speed 100 End End	Delay Time 2H Error E30 Temp. 30
B Child Lock	**C** Door Lock
D Pre Wash	**E** Extra Rinse
F Speed Wash	**G** Delay

Programmes

Programme	Load (kg)			Default Time (h:min)		
	7.0	8.0	9.0	7.0	8.0	9.0
SYNTHETIC	3.5	4.0	4.5	3:18	3:18	3:18
COTTON	7.0	8.0	9.0	3:39	3:39	3:39
MIX	7.0	8.0	9.0	1:20	1:20	1:20
BABY CARE	7.0	8.0	9.0	2:01	2:01	2:01
20°C CARE+	3.5	4.0	4.5	1:08	1:08	1:08
PET HAIR REMOVAL	3.5	4.0	4.5	2:04	2:04	2:04
DRUM CLEAN	--	--	--	1:18	1:18	1:18
SPIN ONLY	7.0	8.0	9.0	0:12	0:12	0:12
JEANS	7.0	8.0	9.0	1:35	1:35	1:35
DUVET	2.5	2.5	2.5	1:27	1:27	1:27
WOOL	2.0	2.0	2.0	0:59	1:07	1:07
ECO 40-60	7.0	8.0	9.0	3:28	3:38	3:48
RAPID 59′	3.5	4.0	4.5	0:59	0:59	0:59
QUICK 15′	2.0	2.0	2.0	0:15	0:15	0:15

NOTE

- The parameters in this table are only for user's reference. The actual parameters maybe different with the parameters in above mentioned table.

Programmes

WMI 40741 W SP							
Cycle	Nominal capacity in kg	Temperature setting °C	Cycle duration in hours and minutes	Energy consumption in kWh/operalling cycle	Water consumption in liter/operalling cycle	Highest temperature °C[1)]	Residual moisture in % /spin speed[2)]
COTTON	7.0	40	3:39	0.939	65	40	53%/1400
MIX	7.0	40	1:20	0.696	65	40	65%/1000
20°C CARE+	3.5	20	1:08	0.189	41	20	65%/1000
BABY CARE	7.0	60	2:01	1.212	65	60	65%/1000
QUICK 15′	2.0	Cold	0:15	0.030	31	Cold	70%/800
ECO 40-60[3)]	7.0	--	3:28	0.578	54.0	31	53.9%/1351
	3.5	--	2:42	0.366	42.0	27	53.9%/1351
	2.0	--	2:42	0.195	34.0	24	53.9%/1351

- The above data is for reference only, and the data may change due to different actual use conditions.
- The values given for programmes other than the ECO 40-60 programme are indicative only.
- 20°C CARE+ is able to clean lightly soiled cotton laundry, at a nominal temperature of 20 °C, which complies with the regulation (EU) 2019/2023.
- Concerning to EN 60456:2016/A11:2020 With(EU) 2019/2014, (EU) 2019/2023, (EU) 2021/340, (EU) 2021/341,

  The EU energy efficiency class is: A
  Energy test program: ECO 40-60. Other as the default.
  Half load for 7.0kg machine:3.5kg.
  Quarter load for 7.0kg machine:2.0kg.

Programmes

WMI 40841 W SP							
Cycle	Nominal capacity in kg	Temperature setting °C	Cycle duration in hours and minutes	Energy consumption in kWh/operalling cycle	Water consumption in liter/operalling cycle	Highest temperature °C[1)]	Residual moisture in % /spin speed[2)]
COTTON	8.0	40	3:39	0.998	71	40	60%/1400
MIX	8.0	40	1:20	0.754	71	40	65%/1000
20°C CARE+	4.0	20	1:08	0.195	44	20	65%/1000
BABY CARE	8.0	60	2:01	1.317	71	60	65%/1000
QUICK 15′	2.0	Cold	0:15	0.030	31	Cold	70%/800
ECO 40-60[3)]	8.0	--	3:38	0.699	61.0	35	53.9%/1351
	4.0	--	2:48	0.348	45.0	29	53.9%/1351
	2.0	--	2:48	0.186	36.0	24	53.9%/1351

- The above data is for reference only, and the data may change due to different actual use conditions.
- The values given for programmes other than the ECO 40-60 programme are indicative only.
- 20°C CARE+ is able to clean lightly soiled cotton laundry, at a nominal temperature of 20 °C, which complies with the regulation (EU) 2019/2023.
- Concerning to EN 60456:2016/A11:2020 With(EU) 2019/2014, (EU) 2019/2023, (EU) 2021/340, (EU) 2021/341,

  The EU energy efficiency class is: A
  Energy test program: ECO 40-60. Other as the default.
  Half load for 8.0kg machine:4.0kg.
  Quarter load for 8.0kg machine:2.0kg.

Programmes

WMI 4094A W SP							
Cycle	Nominal capacity in kg	Temperature setting °C	Cycle duration in hours and minutes	Energy consumption in kWh/operalling cycle	Water consumption in liter/operalling cycle	Highest temperature °C[1)]	Residual moisture in % /spin speed[2)]
COTTON	9.0	60	3:44	1.603	78	60	53%/1400
MIX	9.0	40	1:20	0.813	78	40	70%/800
BABY CARE	9.0	60	2:01	1.423	78	60	65%/1000
QUICK 15′	2.0	Cold	0:15	0.030	31	Cold	70%/800
20°C CARE+	4.5	20	1:08	0.201	48	20	65%/1000
ECO 40-60[3)]	9.0	--	3:48	0.805	68.0	38	53.9%/1351
	4.5	--	2:54	0.495	47.0	30	53.9%/1351
	2.5	--	2:54	0.230	36.0	24	53.9%/1351

- The above data is for reference only, and the data may change due to different actual use conditions.
- The values given for programmes other than the ECO 40-60 programme are indicative only.
- 20°C CARE+ is able to clean lightly soiled cotton laundry, at a nominal temperature of 20 °C, which complies with the regulation (EU) 2019/2023.
- Concerning to EN 60456:2016/A11:2020 With(EU) 2019/2014, (EU) 2019/2023, (EU) 2021/340, (EU) 2021/341,

  The EU energy efficiency class is: A
  Energy test program: ECO 40-60. Other as the default.
  Half load for 9.0kg machine:4.5kg.
  Quarter load for 9.0kg machine:2.5kg.

Programmes

1) The highest temperature reached by the laundry in the wash cycle for at least 5 minutes.
2) Residual moisture after the wash cycle in water content percent and the spin speed at which this was achieved.
3) The ECO 40-60 programme is able to clean normally soiled cotton laundry declared to be washable at 40°C or 60°C, together in the same cycle. This programme is used to assess the compliance with the regulation (EU) 2019/2023.

The most efficient programmes in terms of energy consumption are generally those that perform at lower temperatures and longer duration.

Loading the household washing machine up to the capacity indicated for the respective programmes will contribute to energy and water savings.

Noise and remaining moisture content are influenced by the spinning speed: the higher the spinning speed in the spinning phase, the higher the noise and the lower the remaining moisture content.

⚠ **CAUTION**

- If there is any break in the power supply while the machine is operating, a special memory stores the selected programme. The machine will continue the programme when the power supply is re-established.

Programmes are available according to the laundry type.

Programmes	
COTTON	Hard-wearing textiles, heat-resistant textiles made of cotton or linen.
RAPID 59′	Washing few and not very dirty clothes quickly.
SYNTHETIC	Wash synthetic articles, for example: shirts, coats, blending. While washing the knitting textiles, detergent quantity shall be reduced due to its loose string construction and easily forming bubbles.
BABY CARE	Washing the baby's clothes, it can make the baby's wear cleaner. and make the rinse performance better to protect the baby skin.
JEANS	Specially for jeans.
MIX	Mixed load consisting of textiles made of cotton and synthetics.
20°C CARE+	Able to clean lightly soiled cotton laundry, at a nominal temperature of 20 °C.
PET HAIR REMOVAL	Clean the pet hair and fur from clothing deeply, restrain growth of germ.
QUICK 15′	Extra short programme approx, suitable for lightly soiled washing as a small amounts of laundry.
DUVET	This program is specially designed for washing duvet coats.
WOOL	Hand or machine-washable wool or richwool textiles.Especially gentle wash programme to prevent shrinkage, longer programme pauses (textiles rest in wash liquor).
SPIN ONLY	Spins and drains the water.
ECO 40-60	Able to clean normally soiled cotton laundry declared to be washable at 40 °C or 60 °C, together in the same cycle.
DRUM CLEAN	Specially set in this machine to clean the drum and tube. It applys 90 °C high temperature sterilization to make the clothes washing more green. When this programme is performed, the clothes or other washing cannot be added. The customer can use this programme regularly according to the need.

NOTE

- The Chart is reference only, please refer to real product as standard.
- When the programme is finished , "End" will appear on the display, please select the knob to the Off position.

Option

WMI 40741 W SP

Cycle	Default Temp.(℃)	Default spin speed (rpm)	Additional functions
SYNTHETIC	40	1200	, , ,
COTTON	40	1400	, , , ,
MIX	40	1000	, , , ,
BABY CARE	60	1000	, , , ,
20°C CARE+	20	1000	, ,
PET HAIR REMOVAL	40	1200	, ,
DRUM CLEAN	90	--	
SPIN ONLY	--	1000	
JEANS	30	800	, , ,
DUVET	40	800	,
WOOL	Cold	600	,
ECO 40-60	--	--	
RAPID 59′	30	1000	, ,
QUICK 15′	Cold	800	,

NOTE

- For the maximum spin speed, program time, and other details of the ECO 40-60 program, please refer to the content on the Product Fiche page.
- The table shows which cycle offers which options for adjustment.

Option

WMI 40841 W SP; WMI 4094A W SP

Cycle	Default Temp.(℃)	Default spin speed (rpm)	Additional functions
SYNTHETIC	40	1200	
COTTON	40	1400	
MIX	40	1000	
BABY CARE	60	1000	
20°C CARE+	20	1000	
PET HAIR REMOVAL	40	1200	
DRUM CLEAN	90	--	
SPIN ONLY	--	1000	
JEANS	30	800	
DUVET	40	800	
WOOL	40	600	
ECO 40-60	--	--	
RAPID 59′	30	1000	
QUICK 15′	Cold	800	

NOTE

- For the maximum spin speed, program time, and other details of the ECO 40-60 program, please refer to the content on the Product Fiche page.
- The table shows which cycle offers which options for adjustment.

Speed

Speed
When needed, the spinning speed can be adjusted pressing the Speed button in the following steps: 1400:0-400-600-800-1000-1200-1400

Delay End

Delay End
1. Select a programme.
2.Press the Delay End button to choose the delaying time 0-24H.
3.Press [Start/Pause] to start the delay end operation.

To cancel the Delay End function, press the “Delay End” button before starting the program until the display shows 0 H. If the program has already started, switch the appliance off and afterwards on and select a new programme.

Pre Wash
Extra washing function before the main washing cycle starts to increase the washing performance.

Note: Detergent needs to be added to the compartment I.

Extra Rinse
The laundry will undergo an extra rinse after selecting this function.

Temp.

Temp.
When needed, the washing temperature can be adjusted by pressing the temperature button in the following steps: Cold - 20°C - 30°C- 40°C - 60°C - 90°C.

Speed Wash
The function can decrease the washing time.

My Cycle
To memory the frequently used programme. After choosing the programme and setting the option, press [Temp.] button 3 sec. before start to wash.
The default setting course is COTTON.

Steam
Steam is applicable for daily laundries.
The steam can deeply penetrate the fiber, which effectively eliminate bacterias and germs, preventing odors and protecting your health.

Funct.

Function
Press [Funct.] to select “Pre Wash”, “Speed Wash” or “Extra Rinse”.

NOTE

Usage counter
1:Please press " Speed " and "Steam" on control panel simultaneously and continuously for around 5sec. under power-on status, the device display shows digits--the value can indicate the times of equipment usage.
2.Press " Speed " and "Steam" on control panel simultaneously and continuously for around 5sec. and customer can resume to normal operation.

Child Lock
To avoid mis operation by children.

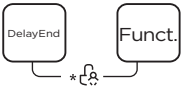

Press [Delay End] and [Funct.] simultaneously for 3 sec until the buzzer beep. The child lock indicator switches on.

CAUTION

When the Child Lock is activated, the display will alternately show “CL” and the remaining time.
Pressing any other button will cause the Child Lock indicator to flash.
When the program ends, “CL” and “End” will alternate on the display.

The Child Lock deactivates all functions in control panel except the Child lock button and OFF function!
After turning off the appliance, the child lock will not be automatically released.
Only the simultaneous pressing of the two buttons can deactivate the Child Lock!
Please deactivate the Child Lock before selecting a new program!

Mute the buzzer

Choose the Programme

Press the [Speed]button for 3sec., the buzzer is mute.

To act the buzzer function, press the button again for 3 seconds. The setting will be kept until the next reset.

CAUTION

- After Muting the buzzer function, the sounds will not be activated any more.

Product Fiche

Supplier's name or trade mark([a])([c]):	
Supplier's address([a])([c]):	
Model identifier([a]): WMI 40741 W SP	
General product parameters:	

Parameter	Value		Parameter	Value	
Rated capacity([b])(kg)	7.0		Dimensions in cm([a])([c])	Height	83
				Width	60
				Depth	54
Energy efficiency index([b]) (EEI_w)	46.8		Energy efficiency class([b])	A ([d])	
Washing efficiency index([b])	1.031		Rinsing effectiveness (g/kg)([b])	5.0	
Energy consumption in kWh per cyele, based on the eco 40-60 programme. Actual energy consumption will depend on how the appliance is used.	0.403		Water consumption in litre per cycle, based on the eco 40-60 programme. Actual water consumption will depend on how the appliance is used and on the hardness of the water.	45	
Maximum temperature inside the treated textile ([b])(℃)	Rated capacity	31	Weighted remaining moisture content ([b])(%)	53.9	
	Half	27			
	Quarter	24			
Spin speed([b])(rpm)	Rated capacity	1351	Spin-drying efficiency class ([b])	B ([d])	
	Half	1351			
	Quarter	1351			
Programme duration([b])(h:min)	Rated capacity	3:28	Type	built-in	
	Half	2:42			
	Quarter	2:42			
Airborne acoustical noise emissions in the spinning phase([a]) (dB(A) re l pW)	72		Airborne acoustical noise emission class ([b])(spinning phase)	A ([d])	
Off-mode (W) (if applicable)	0.50		Standby mode (W)(if applicable)	0.50	
Delay start (W) (if applicable)	4.00		Networked standby (W)(if applicable)	N/A	

Minimum duration of the guarantee offered by the supplier ([a])([c]):	
This product has been designed to release silver ions during the washing cycle	NO
Additional information:	
Weblink to the supplier's website, where the information in point 9 of Annex II to Commission Regulation (EU)2019/2023(1) is found:	

([a]) this item shall not be considered relevant for the purposes of Article 2(6) of Regulation (EU) 2017/1369,
([b]) for the eco 40-60 programme.
([c]) changes to this item shall not be considered relevant for the purposes of paragraph 4 of Article 4 of Regulation (EU)2017/1369.
([d]) it the product database automatically generates the definitive content of this cell, the supplier shall not enter these data.

1) The actual energy consumption will depend on how the appliance is used.
2) The actual water consumption will depend on how the appliance is used and on the hardness of the water.
3) Delivery of the spare parts within 15 working days after having received the order.

Product Data Sheet concerning (EU) 2019/2014

The product data sheet for your appliance can be found online.
Go to https://eprel.ec.europe.eu and enter the model identifier for your appliance to download the data sheet.
The model identifier for your appliance can be found in the technical specifications section.

Product Fiche

Supplier's name or trade mark([a])([c]):	
Supplier's address([a])([c]):	
Model identifier([a]): WMI 40841 W SP	
General product parameters:	

Parameter	Value	Parameter	Value
Rated capacity([b])(kg)	8.0	Dimensions in cm([a])([c])	Height 83 Width 60 Depth 54
Energy efficiency index([b]) (EEI_w)	46.6	Energy efficiency class([b])	A ([d])
Washing efficiency index([b])	1.031	Rinsing effectiveness (g/kg)([b])	5.0
Energy consumption in kWh per cyele, based on the eco 40-60 programme. Actual energy consumption will depend on how the appliance is used.	0.424	Water consumption in litre per cycle, based on the eco 40-60 programme. Actual water consumption will depend on how the appliance is used and on the hardness of the water.	48
Maximum temperature inside the treated textile ([b])(℃)	Rated capacity 35 Half 29 Quarter 24	Weighted remaining moisture content ([b])(%)	53.9
Spin speed([b])(rpm)	Rated capacity 1351 Half 1351 Quarter 1351	Spin-drying efficiency class ([b])	B ([d])
Programme duration([b])(h:min)	Rated capacity 3:38 Half 2:48 Quarter 2:48	Type	built-in
Airborne acoustical noise emissions in the spinning phase([a]) (dB(A) re l pW)	72	Airborne acoustical noise emission class ([b])(spinning phase)	A ([d])
Off-mode (W) (if applicable)	0.50	Standby mode (W)(if applicable)	0.50
Delay start (W) (if applicable)	4.00	Networked standby (W)(if applicable)	N/A

Minimum duration of the guarantee offered by the supplier ([a])([c]):	
This product has been designed to release silver ions during the washing cycle	NO
Additional information:	
Weblink to the supplier's website, where the information in point 9 of Annex II to Commission Regulation (EU)2019/2023(1) is found:	

([a]) this item shall not be considered relevant for the purposes of Article 2(6) of Regulation (EU) 2017/1369,
([b]) for the eco 40-60 programme.
([c]) changes to this item shall not be considered relevant for the purposes of paragraph 4 of Article 4 of Regulation (EU)2017/1369.
([d]) it the product database automatically generates the definitive content of this cell, the supplier shall not enter these data.

1) The actual energy consumption will depend on how the appliance is used.
2) The actual water consumption will depend on how the appliance is used and on the hardness of the water.
3) Delivery of the spare parts within 15 working days after having received the order.

Product Data Sheet concerning (EU) 2019/2014

The product data sheet for your appliance can be found online.
Go to https://eprel.ec.europe.eu and enter the model identifier for your appliance to download the data sheet.
The model identifier for your appliance can be found in the technical specifications section.

Product Fiche

Supplier's name or trade mark([a])([c]):	
Supplier's address([a])([c]):	
Model identifier([a]): WMI 4094A W SP	
General product parameters:	

Parameter	Value		Parameter	Value	
Rated capacity([b])(kg)	9.0		Dimensions in cm([a])([c])	Height	83
				Width	60
				Depth	56
Energy efficiency index([b]) (EEI_w)	51.9		Energy efficiency class([b])	A ([d])	
Washing efficiency index([b])	1.031		Rinsing effectiveness (g/kg)([b])	5.0	
Energy consumption in kWh per cycle, based on the eco 40-60 programme at a combination of full and partial loads. Actual energy consumption will depend on how the appliance is used.	0.494		Water consumption in litre per cycle, based on the eco 40-60 programme at a combination of full and partial loads. Actual water consumption will depend on how the appliance is used and on the hardness of the water.	50	
Maximum temperature inside the treated textile ([b])(℃)	Rated capacity	38	Weighted remaining moisture content ([b])(%)	53.9	
	Half	30			
	Quarter	24			
Spin speed([b])(rpm)	Rated capacity	1351	Spin-drying efficiency class ([b])	B ([d])	
	Half	1351			
	Quarter	1351			
Programme duration([b])(h:min)	Rated capacity	3:48	Type	built-in	
	Half	2:54			
	Quarter	2:54			
Airborne acoustical noise emissions in the spinning phase([b]) (dB(A) re l pW)	72		Airborne acoustical noise emission class ([b])(spinning phase)	A ([d])	
Off-mode (W) (if applicable)	0.50		Standby mode (W)(if applicable)	N/A	
Delay start (W) (if applicable)	4.00		Networked standby (W)(if applicable)	N/A	

Minimum duration of the guarantee offered by the supplier ([a])([c]):	
This product has been designed to release silver ions during the washing cycle	NO
Additional information:	
Weblink to the supplier's website, where the information in point 9 of Annex II to Commission Regulation (EU)2019/2023([c]) is found:	

([a]) this item shall not be considered relevant for the purposes of Article 2(6) of Regulation (EU) 2017/1369,
([b]) for the eco 40-60 programme.
([c]) changes to this item shall not be considered relevant for the purposes of paragraph 4 of Article 4 of Regulation (EU)2017/1369.
([d]) it the product database automatically generates the definitive content of this cell, the supplier shall not enter these data.

1) The actual energy consumption will depend on how the appliance is used.
2) The actual water consumption will depend on how the appliance is used and on the hardness of the water.
3) Delivery of the spare parts within 15 working days after having received the order.

Product Data Sheet concerning (EU) 2019/2014

The product data sheet for your appliance can be found online.
Go to https://eprel.ec.europe.eu and enter the model identifier for your appliance to download the data sheet.
The model identifier for your appliance can be found in the technical specifications section.

CLEANING AND MAINTENANCE

Cleaning and Care

WARNING

- Always unplug the appliance and close the water tap before cleaning and maintenance.

Cleaning the Cabinet

Proper maintenance on the machine can extend its working life. The surface can be cleaned with diluted non-abrasive neutral detergents when necessary. If there is any water overflow, use a towel to wipe it off immediately. Never use sharp items to clean the appliance.

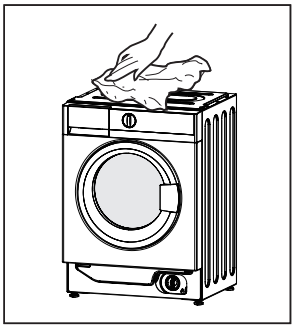

CAUTION

- Never use abrasive or caustic agents. Such as formic acids or its diluted solvents or similar substances, like alcohol or chemical products.

Cleaning the Drum

Any rust stains left inside the drum by metal articles must be removed immediately using chlorine-free detergents. Never use steel wool for cleaning the drum!

NOTE

- Keep any laundry away from the machine while cleaning the drum.

Cleaning the Door Seal and Glass

Wipe the glass and seal after each wash to remove lint and stains. If lint builds up it can cause leakages.
Remove any coins, buttons and other objects from the seal after each wash.
Clean the Door Seal and Glass every the machine runs 60 times (appear C2 on control panel) to ensure the normal operation of the appliance.

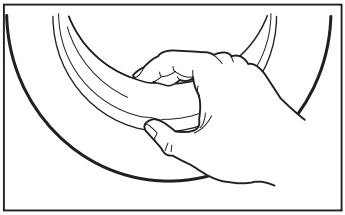

Cleaning the Inlet Filter

NOTE

- Diminishing water flow is a sign that the filter needs to be cleaned.

1. Close the tap and remove the water supply hose from it.

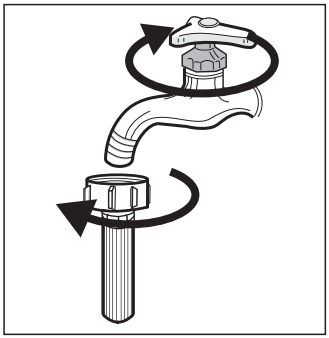

2. Clean the filter with a brush.

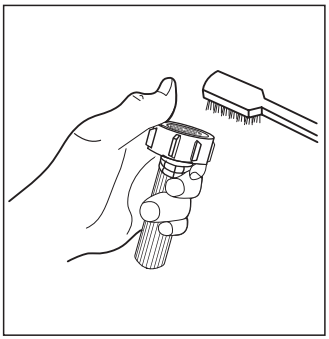

3. Unscrew the water supply hose from the backside of the machine.
   Pull out the filter with long nose pliers.

4. Use a brush to clean the filter.

5. Reinstall the filter to the water inlet and reconnect the water supply hose.

6. Clean the Inlet filter every the machine runs 60 times (appear C2 on control panel) to ensure the normal operation of the appliance.

Cleaning the Detergent Dispenser

- Press down the release [ ] on the softener cover and pull the dispenser drawer out of the recess.
- Lift the softener cover off the dispenser drawer and wash both items with water.
- Clean the inside of the recess with a brush.
- Restore the softener cover and push the drawer back into the recess.

1. Press the release and remove the dispenser drawer

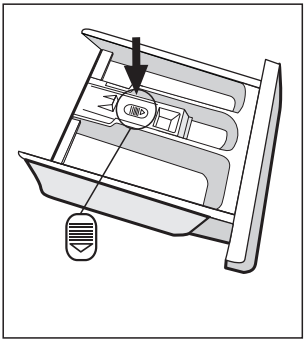

2. Clean the dispenser drawer and the softener cover under water

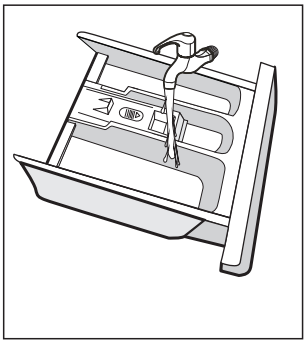

3. Clean the recess with a soft brush

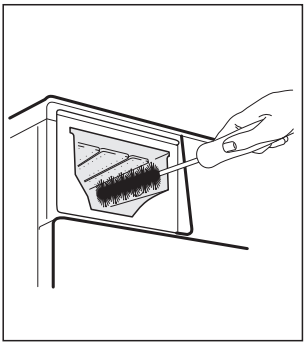

4. Insert the dispenser drawer

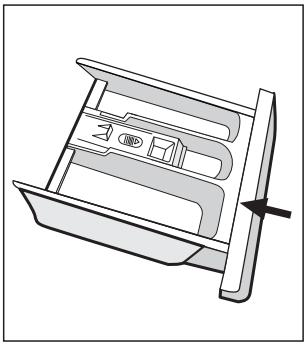

NOTE

- Do not use abrasive or caustic agents to clean plastic parts.
- Clean the detergent dispenser every the machine runs 60 times (appear C2 on control panel) to ensure the normal operation of the appliance.
- The picture is reference only, please refer to real product as standard.

Cleaning the Drain Pump Filter

WARNING

- Make sure that the machine has finished the washing cycle and is empty. Switch it off and unplug it before cleaning the drain pump filter.
- Be careful of hot water. Wait for water cooling down. Risk of scalding!
- Clean the filter periodically every the machine runs 50 times (appear C1 on control panel) to ensure the normal operation of the appliance.

1.Open the filter by turning to the counter clockwise

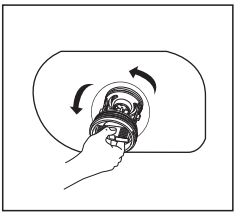

2.Remove extraneous matter

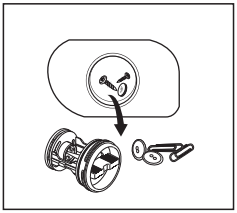

3.Close the lower cover cap

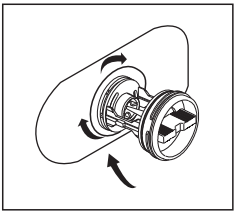

CAUTION

- When the appliance is in use and depending on the programme selected there can be hot water in the pump. Never remove the pump cover during a wash cycle, always wait until the appliance has finished the cycle, and is empty. When replacing the cover, ensure it is securely re-tightened.

TROUBLE SHOOTING

Whenever there is a problem with the appliance, check if you can solve it following the tables below. If the problem persists, please contact the customer service.

Description	Possible Cause	Solution
Appliance does not start	Door is not closed properly.Clothes are stuck.	Close the door properly and restart. Check the laundry.
Door can´t be opened	Safety protection is activated.	Disconnect the power and restart.
Water leakage	Connections are not tight enough.	Check and fasten the water inlet pipe. Check and clean the outlet hose.
Detergent residues in the detergent dispenser	Detergent is damp and/or clotted.	Clean and wipe the detergent dispenser dry.
Indicator or display does not work	PC board or harness have connection problems.	Switch off the power and check if the mains plug is connected properly.
Abnormal noise	Fixing bolts are still in place. Floor is not solid or level.	Check if the fixing bolts have been removed. Make sure the appliance is installed on a solid and level floor.

Error Codes

Description	Possible Cause	Solution
E30	Door is not closed properly.	Close the door properly and restart.
E10	Water injecting problem during wash cycle.	Check if the water pressure is high enough. Straighten the water pipe. Clean the inlet valve filter.
E21	Overtime water draining	Check the drain hose for blockage.
E12	Water overflow	Restart the appliance.
EXX	Others	Restart the appliance. If problem persists, please contact the customer service.

DISPOSAL AND RECYCLING

Important Instructions for Environment

Compliance with the WEEE Directive and Disposing of the Waster Product:
This product complies with EU WEEE Directive (2012/19/EU). This product bears a classification symbol for waster electrical and electronic equipment (WEEE).

This symbol indicates that this product shall not be disposed with other household wastes at the end of its service life. Used device must be returned to offcial collection point for recycling of electrical electronic devices. To find these collection systems please contact to your local authorities or retailer where the product was purchased. Each household performs important role in recovering and recycling of old appliance. Appropriate disposal of used appliance helps prevent potential negative consequences for the environment and human health.

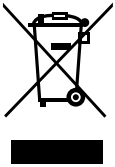

Compliance with RoHS Directive

The product you have purchased complies with EU RoHS Directive (2011/65/EU). It does not contain harmful and prohibited materials specified in the Directive.

Package Information

Packaging materials of the product are manufactured from recyclable materials in accordance with our National Environment Regulations. Do not dispose of the packaging materials together with the domestic or other wastes. Take them to the packaging material collection points designated by the local authorities.

WARRANTY CARD

NOTES

We provide a guarantee for this machine in accordance with the following conditions: You have a manufacturer's warranty of _____ years from the date of purchase (proof of purchase must be provided). Our General Terms and Conditions apply.

Your device / serial number

Purchase date:

Place of purchase:

Do you have any questions ?

We are happy to support you !

Customer Service

Spare parts for your appliance are available for a minimum of 10 years following EU COMMISSION REGULATION 2019/2023 ANNEX II Ecodesign requirements.

In case of questions, please contact our local customer service center.

WARNING

Risk of electric shock

- Never try to repair an appliance which is defective or presumed to defective. You may put your own and future users' lives in danger. Only authorised specialists are allowed to carry out this repair work.
- Improper repair will void the warranty and subsequent damages can't be recognized!

Transport

IMPORTANT STEPS WHEN MOVING THE APPLIANCE

- Unplug the appliance and close the water inlet tap.
- Check if the door and the detergent dispenser are closed properly.
- Remove the water inlet pipe and the outlet hose from the house installations.
- Let the water drain completely from the appliance (see "Cleaning the Drain Pump Filter")
- Important: Re-install the 4 transport bolts in the back of the appliance.
- This appliance is heavy. Transport with care. Never hold any protruding part of the machine when lifting. The machine door can not be used as a handle.

BUILT-IN INSTALLATION

Appendix

Self-tapping screws

Hinges

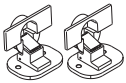

Counter magnet

Spacer

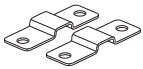

Fixed position paper

Tool

Screw driver

Automatic driver

Ruler

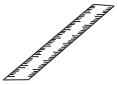

Pencil

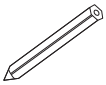

Install Steps

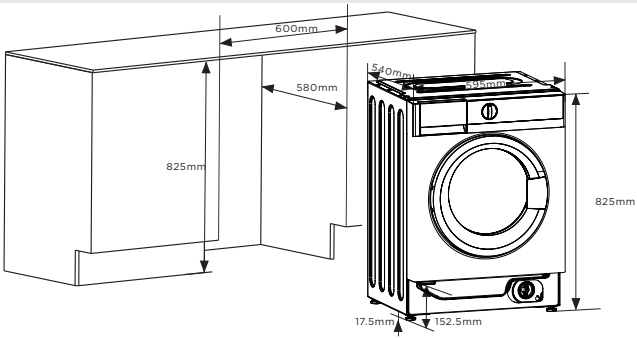

Overview

Preparation and assembly of the door

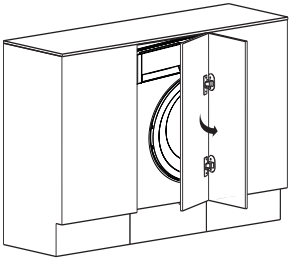

The door is open from left to right

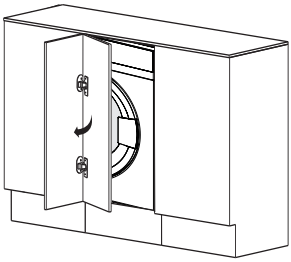

The door is open from right to left

1: Make the mark on the door

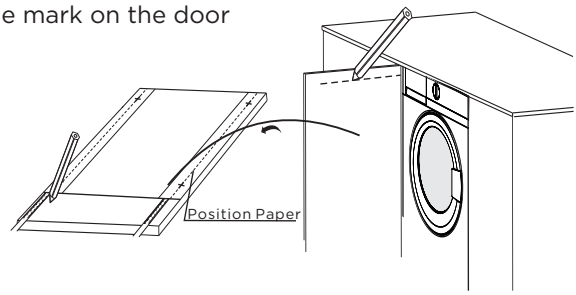

2: Fixed position paper on the door.

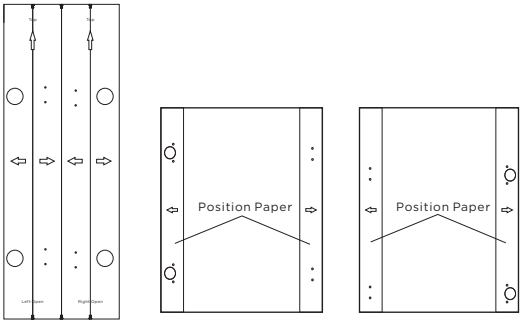

3: Drill hole on the door

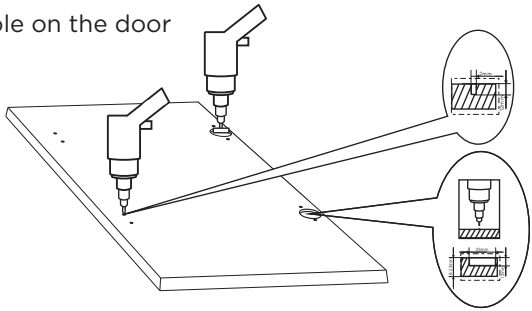

4: Installation the hinges and spacer

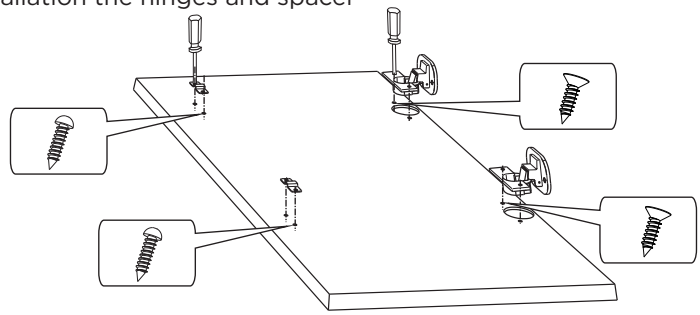

5:Installation the counter magnet

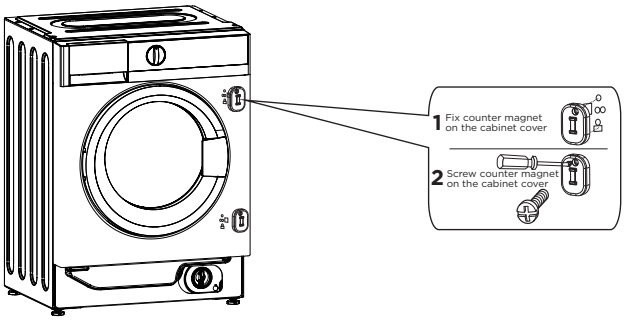

6: Installation the door

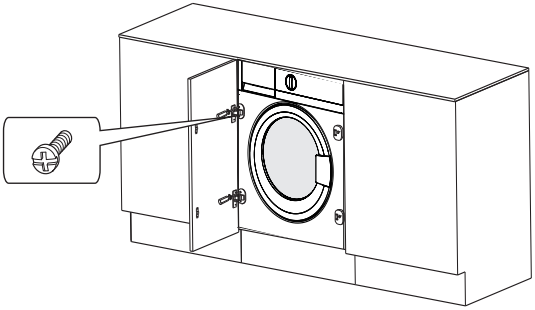

WARNING

- When installing the appliance into the kitchen ensure furniture ,if possible, the hoses are placed in either of the two recesses on the back of the appliance. This will help to prevent the hoses from becoming kinked or trapped.

TEKA

www.teka.com