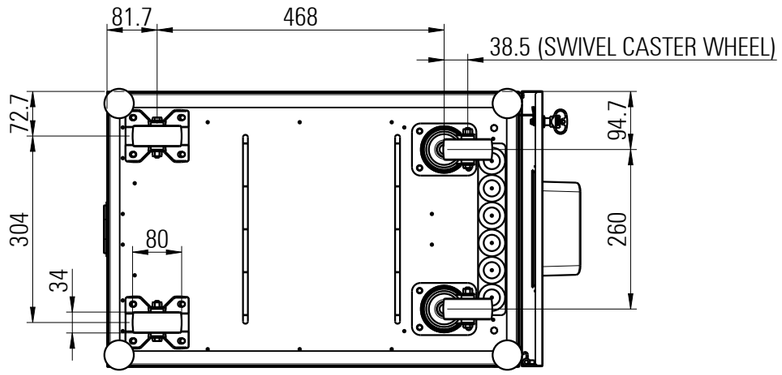

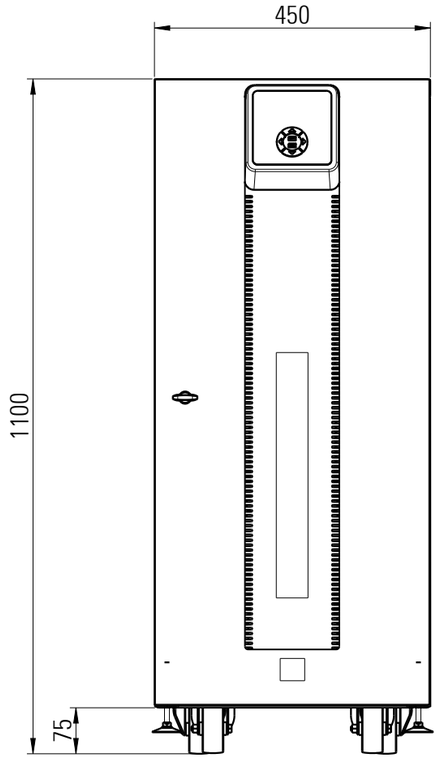

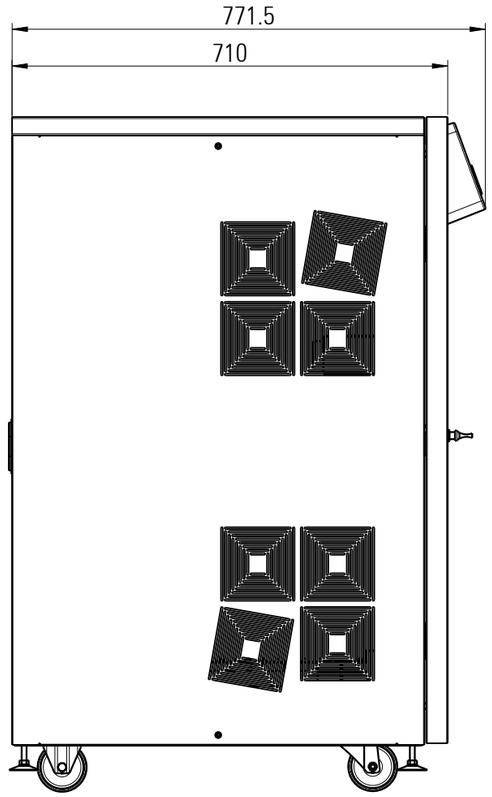

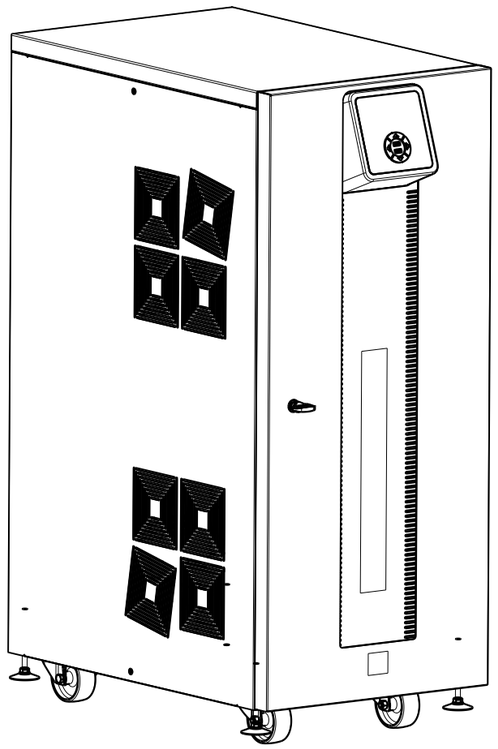

MATERIAL				CUT TOLERANCES	FOLD TOLERANCES
COATING				<100mm: ±0.1mm	<500mm: ±0.5mm
MATERIAL	THICKNESS	COLOUR	FINISHING	100 TO <500mm: ±0.2mm	500 TO <1000mm: ±1mm
				500 TO <1000mm: ±0.3mm	>=1000mm: ±2mm
				>=1000mm: ±0.5mm	DRILL TOLERANCES
				ANGULAR TOLERANCES	<∅6mm: ±0.1mm
				±0.5°	>=∅6mm: ±0.2mm

DRAWN BY: FRANCESC M.	Nº DIAGRAM: FA377A04	salicru
	PAGE / PAGES: 1 / 1	
DATE: 27/11/2013	PLANO DE MEDIDAS CUBE3+ EN ARMARIO AM230 CUBE3+ IN AM230 CABINET DIM. DIAGRAM	
	FORMAT: A3 / E: 1/10 / REMARKS:	

Queda prohibida la reproduccíon y cesión a terceros de este documento, sin previa autorización por escrito de SALICRU S.A. // It is forfiden to reproduce and transfer this document to third parties without previous written authorisation of SALICRU S.A.