TPC touch screen & EXT controller DMX and DALI 1 Universe (A64491)

Touch panel controller

The TPC (Touch Panel Controller) is an elegant lighting controller with a customisable, 4.3" capacitive touchscreen, 512 channels of eDMX output and vast interfacing potential, all over a single Power-over-Ethernet (PoE) network connection. TPCs are available in a range of different coloured bezels and overlays.

TPC Features

Touch Interface

A 4.3" vivid colour capacitive touchscreen makes navigating your project's controls appealing and intuitive. It's quick and easy to activate presets, manual overrides, or use a custom colour picker to personalise your lighting. The TPC puts control of your Pharos Designer system at your fingertips.

Designer Engine

The intelligent Designer Engine gives you complete control of your installation. Based on individually controllable and independently running timelines and scenes, it lets you build dynamic, precise, fully customisable pre-programmed lighting displays, all while giving you the freedom of real-time manual overrides, flexible multi-zone control, prioritisation and more.

Designer Trigger

Timing is everything. Whatever the stimulus, Designer Trigger can handle it. You can control your lighting with responsive, reactive programming. Designer Trigger is a rules engine that uses conditional logic and a broad range of interfaces and protocols. Send and receive any command, to and from any system. Conditional logic is supported, along with a powerful built-in scripting language for unlimited flexibility.

Scalable

The right fit for every installation. Multiple Designer Controllers can be seamlessly linked together to work as one via a standard Ethernet network giving impressive scalability. For additional integration options simply add Remote Devices to further extend the network. Whether one Controller or many, it's all easily programmed using our Designer software.

Remote Management

Future-proof your lighting projects by connecting your Designer controllers to Pharos Cloud. This allows direct control of your Controllers from anywhere in the world, letting you check all of your Controllers' statuses, inputs and outputs, firing triggers, scheduling events, uploading new projects and much more. All Designer Controllers also have their own Web Interface that can be accessed on a local area network that provides real-time statuses, access to the full log and the ability to fire triggers on the controller.

Flexible

Be limited by your design brief, not your control system. Our products support a vast range of different fixture types and can output multiple DMX-over-Ethernet (eDMX) lighting protocols at the same time. No other system gives you this level of flexibility and control over your project.

Pharos Designer

Programmed and configured using the free Designer software – available for Windows or macOS – with upload over Ethernet.

Reliable

Hardware and firmware are self-sufficient, so no PC needs to be left on site. Rugged, compact unit designed for 24/7 operation and reliability.

EXT

DIN rail mounting companion product provides PoE power, DMX and DALI outputs, RS232 serial and 8 digital/analog inputs for triggering and integration.

We reserve the right to make technical and design changes.

THAILAND
LIGMAN Lighting Co.,Ltd.
17/2 Moo 4, Monthong, Bang Nam Priao,
24150 Chachoengsao - Thailand
info@ligman.com

TPC touch screen & EXT controller DMX and DALI 1 Universe (A64491)

Output

sACN	ANSI E1.31 (with per fixture priority) standard
Art-Net	Art-Net I, Art-Net II and Art-Net 3. Configurable broadcast override
KiNET	KiNET V1, V2, V3; PDS/Data Enabler discovery
Pathport	Pathway Connectivity protocol
DMX512	Via EXT or second port on LPC 1
RDM	Via Art-Net, EXT or EDN: supports discovery and addressing via Designer 2 software
EDN	Via EDN: natively integrate, and output DMX, with the EDN
SPI	Via EDN+SDI: synchronous and asynchronous serial data output
DALI	Via EXT or RIO D
Simultaneous	Multiple protocols can be in operation simultaneously. Limited by patched channels, not universes used
Scalable	Synchronises with up to 40 Designer Controllers over network

Technical Data

Power	PoE (IEEE802.3af, Class 2), 4W typical
Configuration	Designer 2
Data storage	Removable SD Card (supplied)
Temperature	0°C to 50°C (32°F to 122°F)
Humidity	10-50% relative, non-condensing
Ingress	IP40
Physical	Wall mounted, partly recessed in UK 2-gang 35mm or custom US 2.5" backbox (supplied separately) 14.6 x 8.6 x 3.2 cm (5.8 x 3.4 x 1.3 in) 0.25 kg (0.55 lbs)
Shipping	20 x 15 x 12 cm (8 x 6 x 5 in) 0.6 kg (1.3 lbs)
Recovery	Hardware watchdog and recessed reset button

Interfaces

Ethernet	RJ45 socket for 10/100Base-TX Ethernet with Link/Data LEDs; Static IP or DHCP; Dual IP address for eDMX
Touchscreen	4.3" capacitive touch, 480×272 24bpp; 340 cd/m2; magnetic overlay
IR Sensor	Learning IR sensor for remote control
Temperature	Built-in ambient temperature sensor

TPC dimensions

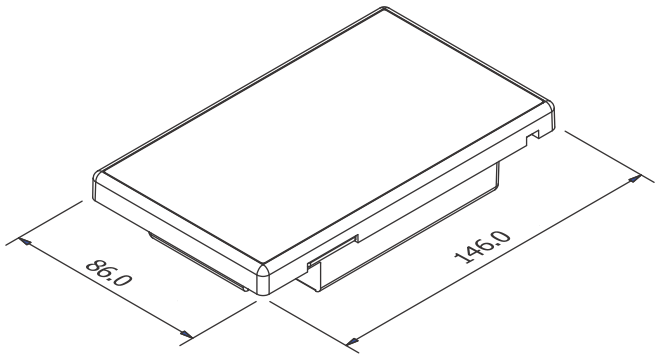

We reserve the right to make technical and design changes.

THAILAND
LIGMAN Lighting Co.,Ltd.
17/2 Moo 4, Monthong, Bang Nam Priao,
24150 Chachoengsao - Thailand
info@ligman.com

TPC touch screen & EXT controller DMX and DALI 1 Universe (A64491)

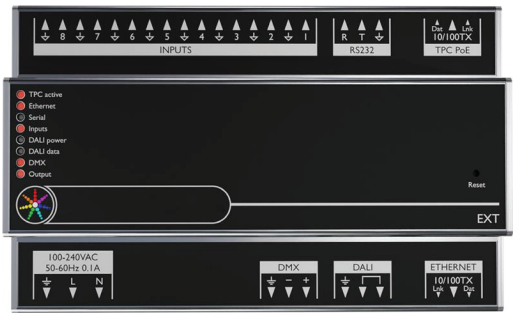

TPC Extension

The EXT is an extension for the TPC and together they form a standalone, mains-powered lighting controller with versatile output and show control options. The TPC is a powerful lighting controller with Ethernet-based output and integration options. However, many DMX and DALI installations don't need the added complexity of network infrastructure. The EXT provides local DMX and DALI output for the TPC, as well as power and other hardware interfaces.

EXT Features

Extend

The EXT is an optional extension for a single TPC. Together they can function as a standalone control system, or scale with other Designer devices over a network. The EXT supplies power and data to the TPC via a single cable, and provides physical interfaces including both DMX and DALI.

Serial Data

The EXT has an RS232 serial port, whose data rate and format settings (baud, parity, stop bits, etc.) are configurable in software.

Designer Trigger

Timing is everything. Whatever the stimulus, Designer Trigger can handle it. You can control your lighting with responsive, reactive programming. Designer Trigger is a rules engine that uses conditional logic and a broad range of interfaces and protocols. Send and receive any command, to and from any system. Conditional logic is supported, along with a powerful built-in scripting language for unlimited flexibility.

Pharos Designer

The EXT requires no additional configuration in the Designer 2 software – everything is programmed via the TPC in the Designer project file, as if the TPC supported all the additional hardware interfaces directly.

DALI Control

Control up to 64 DALI devices from the EXT, with support for commissioning with DALI discovery and configuration commands. Designer includes a convenient drag-and-drop interface for DALI patching and timeline programming. DALI emergency ballasts are also supported with the ability to schedule automatic Function and Duration tests, automatic querying for battery level and lamp hours, and a full test result and error reporting web page.

Flexible Inputs

Each input is individually configurable in one of three modes. As a Contact Closure an external volt-free switch may be connected across the input. As a Digital Input an external voltage source (up to 24V) can be connected across the input and thresholds for 'high' and 'low' triggering can be set. As an Analog Input a variable external voltage can be measured within a configurable range.

DALI Triggering

Designer can also integrate with an existing DALI installation by listening in to DALI control messages sent by another control system or a DALI wall panel and using these as triggers for actions within the Designer system.

Installer Friendly

Made for permanent installation, with installerfriendly 0.200" (5.08mm) plug-in rising clamp terminals, a rugged, compact enclosure, and easy DIN rail mounting.

We reserve the right to make technical and design changes.

THAILAND
LIGMAN Lighting Co.,Ltd.
17/2 Moo 4, Monthong, Bang Nam Priao,
24150 Chachoengsao - Thailand
info@ligman.com

TPC touch screen & EXT controller DMX and DALI 1 Universe (A64491)

Capabilities

Contact Closure	Connect an external volt-free switch between input and ground (internal 2.2k pull-up to 5V)
Digital In	Connect an external voltage source between input and ground (24V maximum; internal 2MOhm pull-down to 0V); software configurable low/high threshold
Analog In	Connect an external voltage source between input and ground (24V maximum); software-configurable range
Serial Data	RS232; configurable port; send/receive free syntax in ASCII, HEX or decimal
DALI Control	Control for up to 64 DALI devices including device discovery and configuration
DALI Receive	Receive DALI messages from other controllers such as wall panels or occupancy sensors
Emergency Lighting	Schedule automatic Function and Duration tests; automatic querying for battery level and lamp hours; test result and error reporting web page
Bus Power Detection	Detect and report bus power status, a separate DALI bus power supply is required

Interfaces

TPC PoE	RJ45 socket with Link/Data LEDs for direct connection to TPC only (100m max distance)
Ethernet	RJ45 socket for 10/100Base-TX Ethernet with Link/Data LEDs; Fixed IP or DHCP
DMX512	Isolated DMX port, RDM compatible *
DALI	Port can transmit and receive DALI commands * Supports DALI standards: EN 62386-101:2009, EN 62386-102:2009, EN 62386-202:2009, EN 62386-209:2011
Serial	RS232 *
Inputs	Individually selectable operating mode for contact closure, digital or analog input (24V maximum) *

Technical Data

Power	100-240V AC *, 50-60Hz, 0.1A, 10W typical
Required	TPC
Configuration	Designer 2
Temperature	0°C to 50°C (32°F to 122°F)
Humidity	10-50% relative, non-condensing
Ingress	IP40
Physical	8 unit wide DIN rail mounting enclosure (DIN43880 / EN60715 (35/7.5 rail)) 14.4 x 9 x 5.8 cm (5.7 x 3.5 x 2.3 in) 0.5 kg (1.1 lbs)
Shipping	20 x 15 x 12 cm (8 x 6 x 5 in) 0.7 kg (1.6 lbs)
Recovery	Hardware watchdog and recessed reset button

EXT dimensions

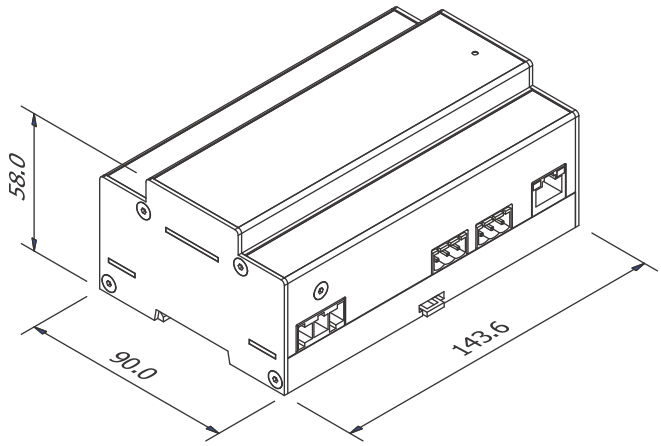

We reserve the right to make technical and design changes.

THAILAND
LIGMAN Lighting Co.,Ltd.
17/2 Moo 4, Monthong, Bang Nam Priao,
24150 Chachoengsao - Thailand
info@ligman.com