EDN 10 (A65391)

Ethernet Data Node

The EDN (Ethernet Data Node) is a convenient and scalable solution, providing cost-effective Ethernet- distributed DMX ports for large control projects. The EDN is an easily configurable networking node that is specifically designed to add physical DMX ports to Designer Controllers and integrates natively with the full Designer range. Extremely compact, it packs up to 20 DMX512 output ports into a 1U 19" form factor. For higher port count installations, nodes can be daisy-chained to provide as many physical DMX ports as you need. EDNs are discoverable through Designer software and associated to a Controller to be seamlessly configured as part of your patch. Ports can be flexibly assigned to any Designer Controller in your project providing an elegant data distribution solution over an Ethernet network with minimal setup required.

EDN Features

Isolation

The EDN offers up to 20 DMX512 output ports to control your fixtures. Each port is independently galvanically isolated up to 2kV, ensuring the control circuitry and each port of the EDN is protected against a multitude of electrical line faults, including earth potential rise and ground loops.

Protection

The EDN is equipped with "self-healing" DMX ports, giving your equipment added protection from incorrect setup and energy surges, such as short circuits, power induction and AC power faults. Should an energy surge occur, it will be contained by the EDN, preventing it from flowing into other components; once the external fault is cleared, the ports "self-heal", restoring DMX output automatically.

Integration

Built from the ground up on technology, the EDN natively interfaces with the rest of the product range including Designer software. Connecting it to your Designer lighting project is as simple as ensuring the EDN is on the same network as the Controllers. From there, Designer will detect it, giving you full control of your Ethernet network lighting solution with minimal effort.

Scalable

Up to 200 EDN units and other Remote Devices can be combined with one or more Designer Controllers on the same network to build the ideal system for your installation. Each Remote Device is easily addressed using a convenient thumb wheel. Whether one Controller or many, it's all easily programmed using the Designer software.

RDM Capable (LPC Family, Designer v2.8+)

When connected to a TPC, LPC and LPC X, the EDN supports the Remote Device Management protocol (ANSI E1.20), allowing fixtures connected to any of the DMX512 outputs to communicate back to their respectively assigned Controllers over an Ethernet network.

Network

Works with any Controller in the Designer range over an Ethernet network. A second network port is provided for daisy-chaining EDNs together. Our recommended limit of 8 daisy-chained EDNs is to ensure high performance; if that number is exceeded, some latency could become apparent.

SDI

Accessory for the EDN supporting serial data protocol outputs for controlling products such as addressable LED tape.

Reliable

Solid-state design for 24/7 operation and reliability.

Installer Friendly

Made for permanent installation, with installer-friendly connectors and easy 19" rack mounting.

We reserve the right to make technical and design changes.

THAILAND
LIGMAN Lighting Co.,Ltd.
17/2 Moo 4, Monthong, Bang Nam Priao,
24150 Chachoengsao - Thailand
info@ligman.com

EDN 10 (A65391)

Interfaces

Ethernet	Two Neutrik etherCON (RJ45 compatible) for 100†/1000 Base-TX Ethernet with Link/ Data LEDs; Static IP or DHCP † From Designer v2.8 Note: LPC 1/2/4 & TPCs support 10/ 100Base-TX
eDMX	Ten (EDN 10) DMX512 ports (USITT E1.11-2008), RDM Compatible *

* Install-friendly 0.200" (5.08mm) plug in rising clamp connectors (included)

Protocols

DMX	DMX512 (512 channels each) in DMX mode
RDM	Supports discovery and addressing via Designer Software. LPC Family Controllers only
UltraDMX	MY94441 supported natively
SPI	In SDI mode, supports serial data via the SDI

Technical Data

Power	100-240V AC, 50-60Hz, 0.25-0.12A, 25W typical (30W maximum), IEC connector with switch (power cable not supplied)
Required	Any Designer Controller
Configuration	Designer 2.8 or later (EDN 10)
Addressing	By rotary selector switch
Temperature	0°C to 50°C (32°F to 122°F)
Humidity	10-50% relative, non-condensing
Ingress	IP20
Protection	Self-healing ports can withstand continuous AC voltage up to 300V or peak impulse voltage up to 650V with duration less than 10ms
Isolation	Ports independently galvanically-isolated up to 2kV
Physical	19" rack unit, 1U 48.3 x 18.1 x 4.5 cm (19 x 7.1 x 1.8 in) 1.6 kg (3.5 lbs)
Shipping	57 x 30 x 18 cm (22 x 12 x 7 in) 3.2 kg (7 lbs)
Recovery	Hardware watchdog and recessed reset button

LPC dimensions

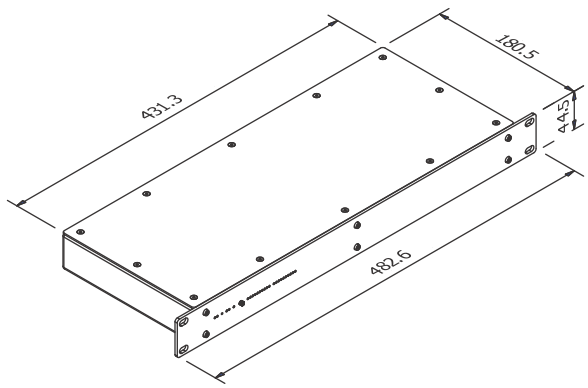

THAILAND
LIGMAN Lighting Co.,Ltd.
17/2 Moo 4, Monthong, Bang Nam Priao,
24150 Chachoengsao - Thailand
info@ligman.com