GANDALF 24 (GA-90245)

IP65 IK08

Product description

1 side

microVos microPrim™

Luminaire Structure

- Die-cast aluminium housing
- Pre-treated before powder coating ensuring high corrosion resistance
- Single cable entry
- One cable gland supplied with 0.5 m of 3x1.0 sqmm outdoor cable
- Stainless steel fasteners in grade 304 with zinc flake coating (ZFC)
- Durable silicone rubber gasket
- Clear toughened glass
- High-efficiency polycarbonate lens
- Integral control gear
- Surge protection 10kV

Optic

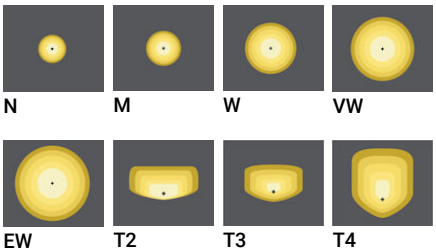

Product colour

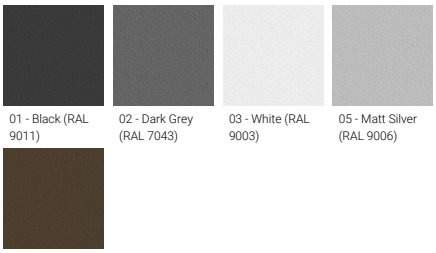

Special finishes upon request

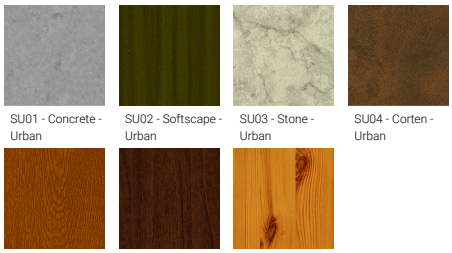

We reserve the right to make technical and design changes.

THAILAND
LIGMAN Lighting Co.,Ltd.
17/2 Moo 4, Monthong, Bang Nam Priao,
24150 Chachoengsao - Thailand
info@ligman.com

Good Labour Practices

GANDALF 24 (GA-90245)

Technical information

Material	Aluminium
Light source	48 LED
Power	89 W
Lumen	8578 - 11837 lm
Efficacy	96 - 133 lm/W
Driver option	Integral control gear
Driver	Constant current (CC)
Input voltage	220-240 V 50/60 Hz
Optic	N, M, W, VW, EW, T2, T3, T4
Optic value	11°, 26°, 52°, 66°, 101°x114°, 140°x47°, 138°x64°, 99°x77°

CCT / CRI	3000K CRI80, 4000K CRI80
Bug	B2-U0-G2, B3-U0-G0, B4-U0-G0, B5-U0-G0
ULR	<1%
ULOR	<1%
CIE flux code nº3	100, 97, 98, 99
Dimming type	On/Off, 1-10V, DALI
Product colours	Black, Dark Grey, White, Matt Silver, Bronze, Concrete - Urban, Softscape - Urban, Stone - Urban, Corten - Urban, Oak - Woodland, Walnut - Woodland, Pine - Woodland
Weight	10.7 kg
Operating temperature	-20 °C to 50 °C
EPA (m2)	0.096

Cable	One cable gland supplied with 0.5 m of 3x1.0 sqmm outdoor cable
Through wiring	Single cable entry
Lens / Reflector / Optic	Clear toughened glass, High-efficiency polycarbonate lens
MacAdam Ellipse	3 SDCM
Lifetime L90B10 (hours)	> 90,000
Lifetime L80B10 (hours)	> 90,000
Lifetime L80B50 (hours)	> 90,000
Variants (On/Off, 1-10V, DALI)	Compatible with EN/ IEC 60598-2-22: Suitable for emergency installations as central supply, non-maintained (Z0)

GA-90245

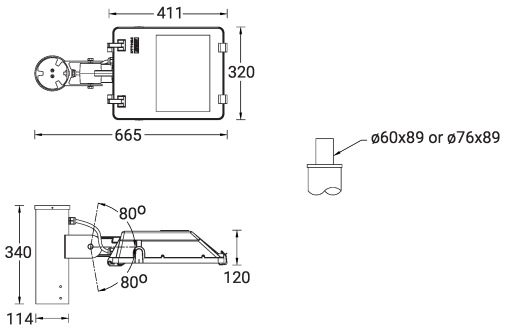

THAILAND
LIGMAN Lighting Co.,Ltd.
17/2 Moo 4, Monthong, Bang Nam Priao,
24150 Chachoengsao - Thailand
info@ligman.com

Accessory

DALI Control System
Control-DALI

THAILAND
LIGMAN Lighting Co.,Ltd.
17/2 Moo 4, Monthong, Bang Nam Priao,
24150 Chachoengsao - Thailand
info@ligman.com

GLP Good Labour Practices