LIGHT LINEAR PT 5 (LI-21181-LC)

IP65 IK08

Product description

2 sides - Supplied with specific square, straight aluminium pole - Height options: 3 - 6 m - LIGHTCONNECT™

microVos LIGHT CONNECT™ microPrim™ TURTLE FRIENDLY DARKSKY APPROVED Reduces light pollution Certified by DarkSky.org MOTION SENSOR

Luminaire Structure

- Die-cast aluminium housing
- Extruded aluminium column
- Pre-treated before powder coating ensuring high corrosion resistance
- Single cable entry
- Stainless steel fasteners in grade 304 with zinc flake coating (ZFC)
- Durable silicone rubber gasket
- Clear toughened glass
- High-efficiency polycarbonate lens
- Integral control gear
- Maximum wind load resistance is 100 km/h
- Surge protection 10kV

Optic

T2 T3 T4

Product colour

01 - Black (RAL 9011)
02 - Dark Grey (RAL 7043)
03 - White (RAL 9003)
05 - Matt Silver (RAL 9006)
06 - Bronze (RAL 6014)

Special finishes upon request

SU01 - Concrete - Urban
SU02 - Softscape - Urban
SU03 - Stone - Urban
SU04 - Corten - Urban
SW01 - Oak - Woodland
SW02 - Walnut - Woodland
SW03 - Pine - Woodland

We reserve the right to make technical and design changes.

05:47, 16-03-2026

https://www.ligman.com/light-linear-pt-5-li-21181-lc/

THAILAND
LIGMAN Lighting Co.,Ltd.
17/2 Moo 4, Monthong, Bang Nam Priao,
24150 Chachoengsao - Thailand
info@ligman.com

GLP Good Labour Practices

LIGHT LINEAR PT 5 (LI-21181-LC)

Technical information

Material	Aluminium
Light source	2 x 24 LED
Power	107 W
Lumen	12250 - 14288 lm
Efficacy	113 - 132 lm/W
Driver option	Integral control gear
Driver	Constant current (CC)
Input voltage	220-240 V 50/60 Hz
Optic	T2, T3, T4

Optic value	140°x43°, 144°x72°, 120°x79°
CCT / CRI	2700K CRI80, 3000K CRI80, 4000K CRI80
Bug	B1-U0-G1, B2-U0-G2
ULR	<1%
ULOR	<1%
CIE flux code n°3	97, 98
Dimming type	DALI
Product colours	Black, Dark Grey, White, Matt Silver, Bronze, Concrete - Urban, Softscape - Urban, Stone - Urban, Corten - Urban, Oak - Woodland, Walnut - Woodland, Pine - Woodland
Weight	36.8 kg

Operating temperature	-20 °C to 40 °C
EPA (m2)	0.180
Through wiring	Single cable entry
Lens / Reflector / Optic	Clear toughened glass, High-efficiency polycarbonate lens
MacAdam Ellipse	3 SDCM
Lifetime L90B10 (hours)	> 90,000
Lifetime L80B10 (hours)	> 90,000
Lifetime L80B50 (hours)	> 90,000
Variants (DALI)	Compatible with EN/ IEC 60598-2-22: Suitable for emergency installations as central supply, non-maintained (Z0)

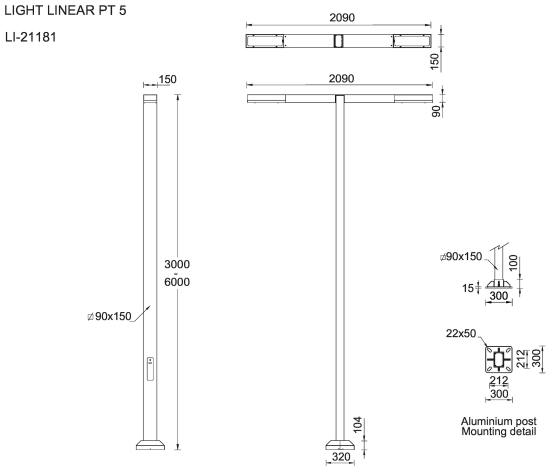

THAILAND
LIGMAN Lighting Co.,Ltd.
17/2 Moo 4, Monthong, Bang Nam Priao,
24150 Chachoengsao - Thailand
info@ligman.com

Good Labour Practices

LIGHT LINEAR PT 5 (LI-21181-LC)

Accessory

Circuit breaker box IP44
A21291

Root mount kit
A20891

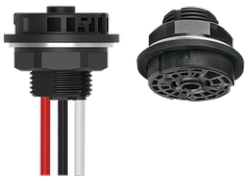

Zhaga Book 18 socket (Down)
A90991-D

Zhaga Book 18 socket (Up)
A90991-U

Motion sensor - PIR - DALI - Up to 12 m
A91691-L7

Motion sensor - PIR - DALI - Up to 3 m
A91691-L2

NEMA 7 socket
A90891

Internal cable support for pole 3 m
A23991

Internal cable support for pole 4 m
A24091

Internal cable support for pole 5 m
A24191

Internal cable support for pole 6 m
A24291

DALI Control System
Control-DALI

Pole (required)

3 m - Square, straight aluminium pole for LIGHT LINEAR PT - 2 sides
APC230090-PT5-LI-21181

4 m - Square, straight aluminium pole for LIGHT LINEAR PT - 2 sides
APC240090-PT5-LI-21181

5 m - Square, straight aluminium pole for LIGHT LINEAR PT - 2 sides
APC250090-PT5-LI-21181

6 m - Square, straight aluminium pole for LIGHT LINEAR PT - 2 sides
APC260090-PT5-LI-21181

We reserve the right to make technical and design changes.

THAILAND
LIGMAN Lighting Co.,Ltd.
17/2 Moo 4, Monthong, Bang Nam Priao,
24150 Chachoengsao - Thailand
info@ligman.com