CEILING MOUNTED 360 º MOVEMENT DETECTOR

SURFACE MOUNTING

DM TEC 001, DM TEC 01N and DM TEC 01P

INSTRUCTIONS MANUAL

Technical specifications

- **Power supply:** 230V$_{AC}$ ±10% ~ 50/60 Hz
- **Power consumption:** <1W
- **Contact load:** 16A cosφ = 1
  - LED Lamps: 400W
  - Incandescence: 3.000W
  - Halogens 230V: 3.000W
  - Halogens Electronic transfo.: 3.000W
  - Halogens Ferromagnetic transfo.: 2.400W
  - Fluorescence: 1.300W (130μF)
  - PL lamps: 18x7W, 12x11W, 10x15W, 10x20W, 10x23W
- **Detection angle:** Circular 360º
- **Range of coverage:** Ø7m at 2,5m high and 18ºC
- **Settings:** Via potentiometer or remote control (EM MAN DM0)
- **Lux value:** 5 ~ 1.200Lux
- **Time delay:** 5 seconds ~ 10 minutes
- **Dimensions (mounted):** ∅118,5mm x 45mm
- **Degree of protection:** IP40 / Class II
- **Working temperature:** –10ºC ~ +45ºC

CAUTION

- Installation and assembly of electrical equipments must be carried out by qualified electricians.
- Disconnect power supply before installing.
- High in-rush current would be caused when bulbs are burned which might damage the detector permanently.

1 DESCRIPTION

- Indoor movement detector for surface ceiling mounting.
- Circular detection area, 360º.
- One output channel with zero crossing control.
- High load relay, which allows switching practically any type of load.
- Constant light measurement, allowing to condition its operation to daylight level.
- High sensitivity PIR sensor, which detects small movements.
- Possibility to connect several detectors in parallel to expand the area to be covered in a single line of lighting.
- A red LED is equipped as an indicator for test triggering.
- Optional IR remote control for easy and quick setting (EM MAN DM0).

2 DIMENSIONS

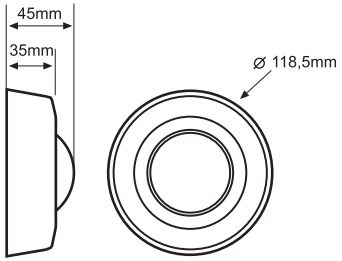

3 INSTALLATION

A. Select a proper location:

Since the detector responds to temperature changes, please avoid the following conditions:

- Avoid aiming the detector toward objects whose surfaces are highly reflective or are subject to rapid temperature changes.
- Avoid mounting the detector near heat sources, such as heating vents, air conditioners, dryers, etc.
- Do not aim the sensor towards any kind of light.
- Avoid aiming the detector towards objects which may move by wind, such as curtains, trees, bushes, etc.

Take into account the walking direction when installing. It is less sensitive to movement across the detector and more sensitive to movement directly toward the sensor, which will reduce the detection coverage.

In the event that movement is directly toward to detector the detection coverage will be extended.

B. Access terminals, anchors and potentiometers:

To access only to separate the cover.

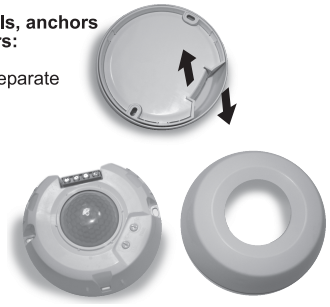

C. Mounting:

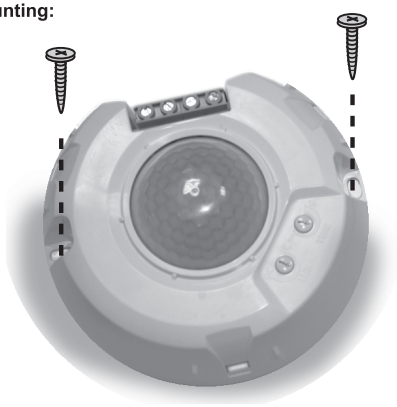

4 RANGE

It is recommended to mount the detector at a height of 2.5m, obtaining in this way a maximum detection area of Ø7m.

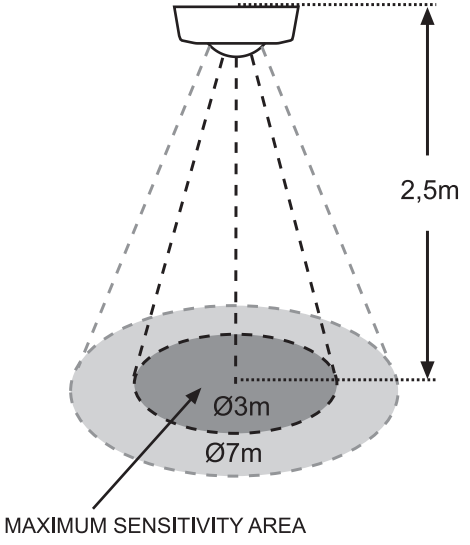

5 WIRING DIAGRAMS

To do the wiring, use one of the following wiring diagrams:

- Simple installation with one detector:

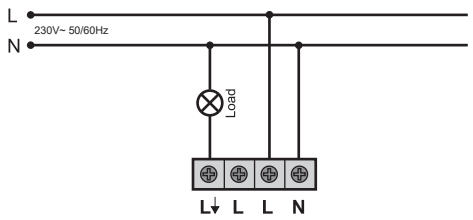

- Installation with two detectors in parallel:

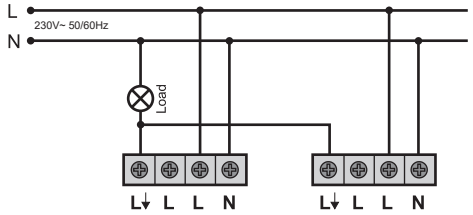

- Installation with one detector and a switch to connect or disconnect the turning with detection:

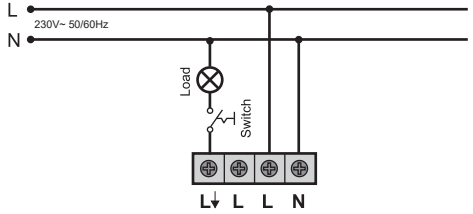

- Installation with one detector and permanent light function:

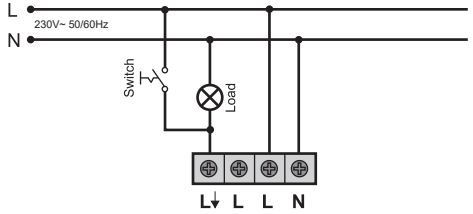

- Installation with one detector and a DINUY staircase time switch (MI EL3 003):

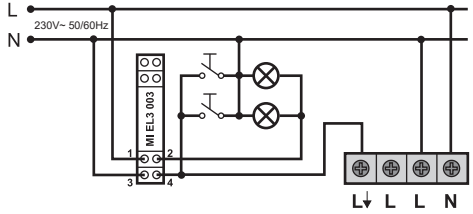

- Installation with one detector and a DINUY time switch in parallel (MI PLA 002):

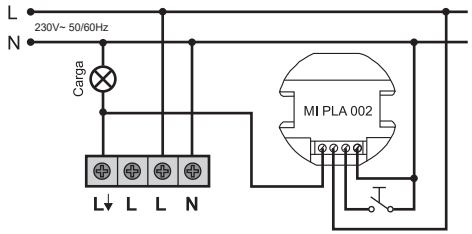

6 SETTINGS AND TEST

SETTINGS

"Lux" and "Time" values can be adjusted via the control knobs of the detector or with an optional IR remote control (EM MAN DM0).

Brightness setting (LUX)

· Its function is to set the maximum brightness value, below which the detector will activate the load as soon as it detects movement.

· The user can set this value according to his requirements, between 5 and 1.200Lux. Values marked on the potentiometer are only as reference.

· If the knob is set to "☾" the detector will only work in the dark, at night (if there is not enough daylight).

· If the knob is set to "☀☾" the light sensor is inactive, it will switch the load on regardless the daylight level.

Time delay setting (TIME)

· Sets the delay off time for lighting. This time can be adjusted between 5 sec. and 10 min.

· After the first detection, the time is reset, and the timing starts again, each time a new movement is detected.

Settings carried out using remote control (EM MAN DM0)

· The Time and Lux settings can be adjusted via this remote control, without need to access to the potentiometers.

· Detector's LED behavior when using the remote control:
  - The LED will blink twice (f=3Hz) as soon as it receives a telegram from the remote control.
  - The LED will be on for 1s and off for 5s after receiving a 'Permanent ON/OFF' signal from the remote control.

WORKING TEST

Note

After connecting the supply. In order that the detector works normally we will have to wait about 2 minutes to begin to realize the tests.

The purpose of the test procedure is to check and adjust the coverage pattern of the motion sensor when it is connected for the fist time.

The red LED, which is within the lens, can be used as an indicator when performing the test procedure, without any load. This LED lights whenever movement is detected and stays on until the time delay expires.

Turn the "LUX" control knob to "☀☾" and "TIME" to " - ".

Walk from outside across to the detection pattern until the LED and load turn on.

Once verified that the operation is successful, set the detector to the desired values.

7 MASKING CLIPS

In order to limit the detection range or areas are being covered that should not be detected, the coverage can be reduced by using the enclosed masking clips.

8 TROUBLE SHOOTING

When the detector stops working, check the possible failures and the solutions suggested in the following table that maybe will help you to solve the problem:

Problem	Possible cause	Suggested solution
Lamp does not light up	1. Power is not turned on	1. Supply the detector
	2. Wrong wiring	2. Check connections
	3. Incorrect setting of Lux	3. Check this setting
	4. Lamp may be defect	4. Replace lamp
	5. 'Permanent OFF' set via remote control (if used)	5. Press OFF key to return to automatic mode
Lamp stays ON continuously	1. The time of disconnection fixed is too long	1. Reduce the time of disconnection and verify that the lamps go out passed the time
	2. Thermal activity detected withing detection area	2. Remove heatsource (persons, animals, fans, etc.)
	3. Wrong wiring	3. Check connections
	4. 'Permanent ON' set via remote control (if used)	4. Press ON key to return to automatic mode
Lamp is switched on and off cyclically	The load (fluorescence, contactor,...) is continuously generating harmonics triggering the detector in each switching	Separate the detector from the load or connect a RC harmonic suppression filter between L' and N
Nuisance triggering	Heat sources, highly reflective objects or any object which may be swayed by the wind is within the detection range	Avoid aiming the detector towards any heat source, any reflective surface or swaying objects

DINUY S.A.
c/Auzolan Nº2
20303 Irún (Spain)
info@dinuy.com
www.dinuy.com