DiNUY

Brighten up your day

Quick start guide

Multi-function detectors with selective coverage

DM SUP B1X

DM BRA B1X

DM TEC B1X

DM TEC B3X

DM TEC PAX

1 How do I get the app?

a. Download and install the APP DINUY - Configure.

b. Sign up and verify he email you receive to access the app.

DiNUY

Available on the App Store

GET IT ON Google Play

If you cannot find the email check your spam folder.

2 Detector installation

a. Install the detector following the wiring diagram.

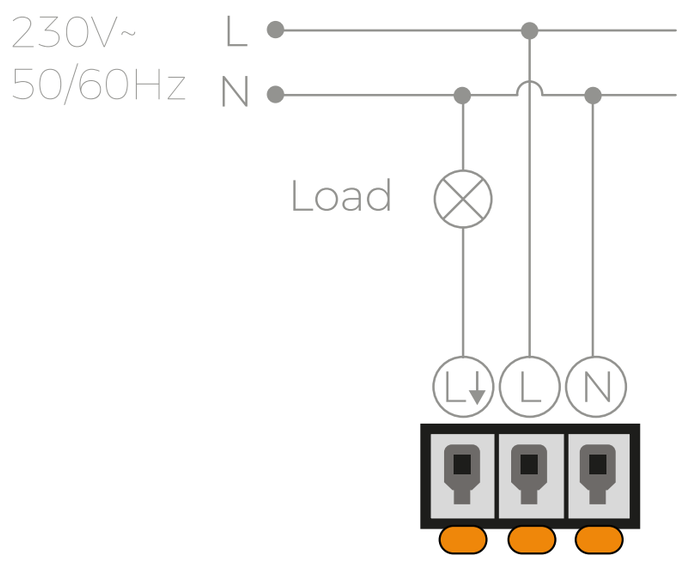

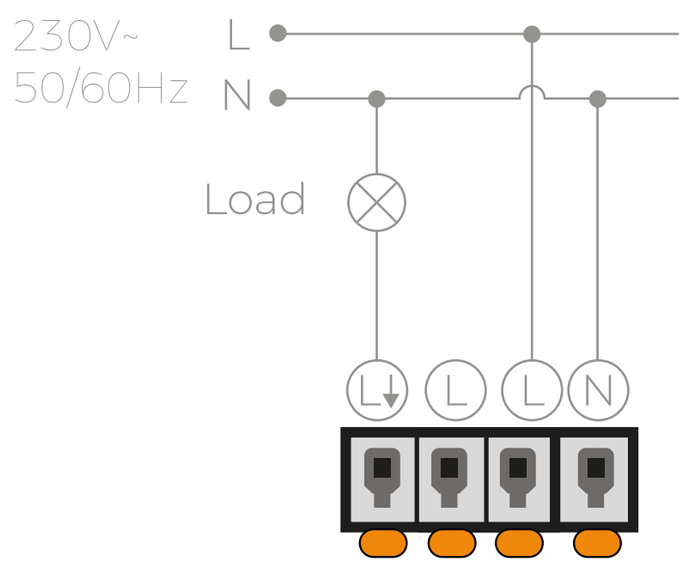

b. The detector emits a blue light to indicate that Bluetooth is ready to receive data from the mobile phone.

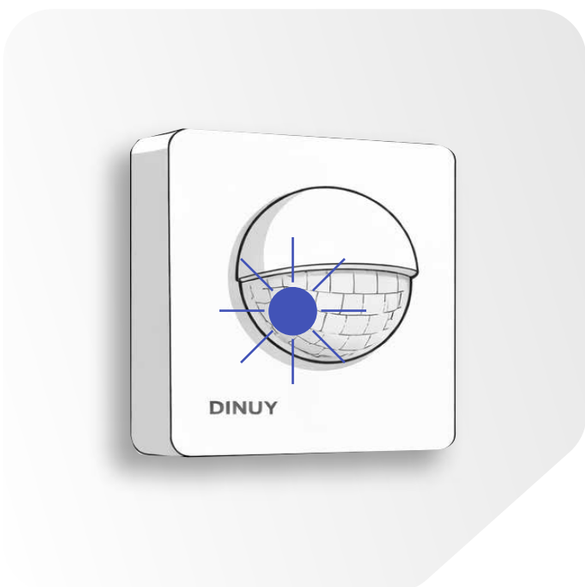

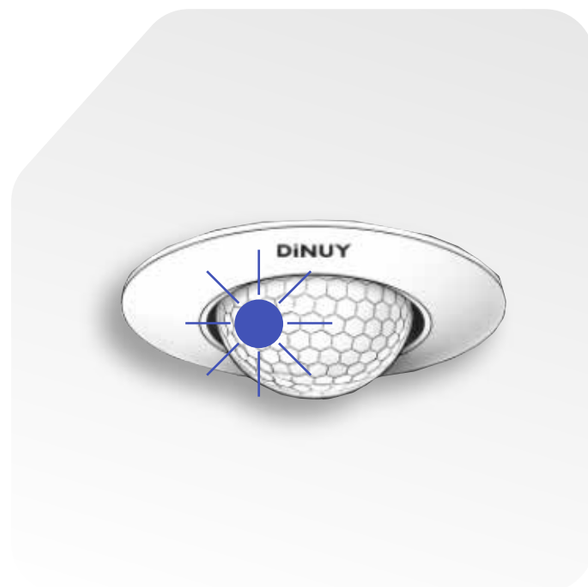

It will remain on for 2 hours.

3 Factory settings

DINUY detectors are supplied with a "Plug & Play" configuration suitable for many applications such as:

- Operating mode: motion detector.
- Delay time: 1 minute.
- Brightness: disabled.
- Coverage: maximum.

To modify these parameters, quickly and precisely use the DINUY - Configure app from your mobile phone.

a. Press « DETECTORS ».

b. Press « + New template ».

c. Select the model to configure.

4 Settings: basic and advanced.

a. In the « BASICS » tab, the main settings for the detectors are selected.

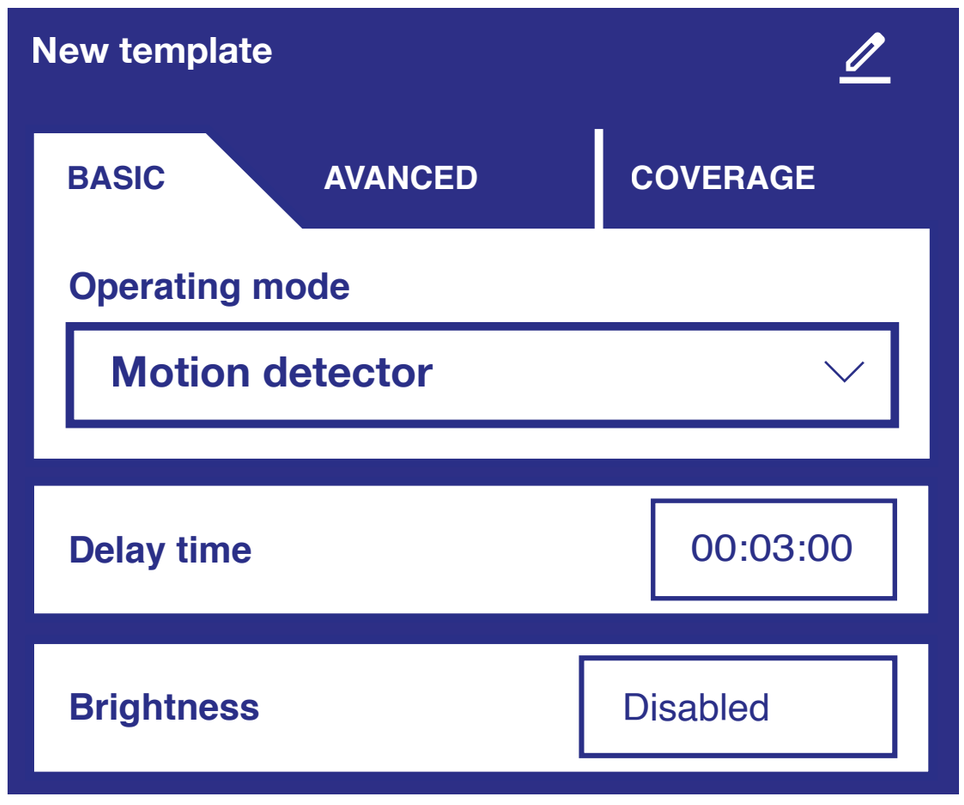

- In « Operating mode » you choose the detector operating mode:

  Motion detector. Activated by movement.
  Presence detector. Activated by movement and ambient light.
  Twilight detector. Activated by ambient light.

- « Delay time » Sets how long it remains active after detection.

- « Brightness » Sets the light threshold.

b. In the « ADVANCED » tab, options not related to detection are selected.

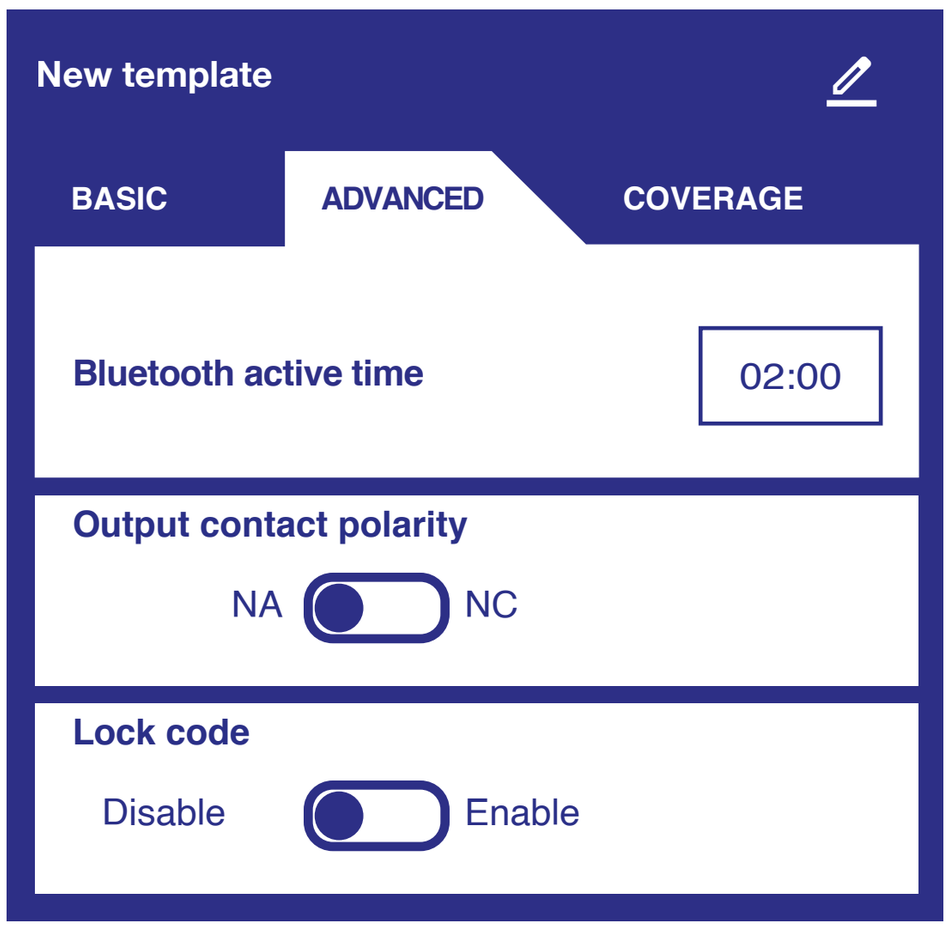

- « Bluetooth active time » Sets how long Bluetooth stays active after the detector is powered on.

- « Output contact polarity » reverses the detector polarity. The device opens the relay on detection instead of closing the contact.

- « Lock code » lets you enter a 4-digit PIN to prevent unauthorized access to the system.

5 Selective coverage configuration.

a. In the « COVERAGE » tab, you can select the detection zones by pressing the « AREA » tabs several times.

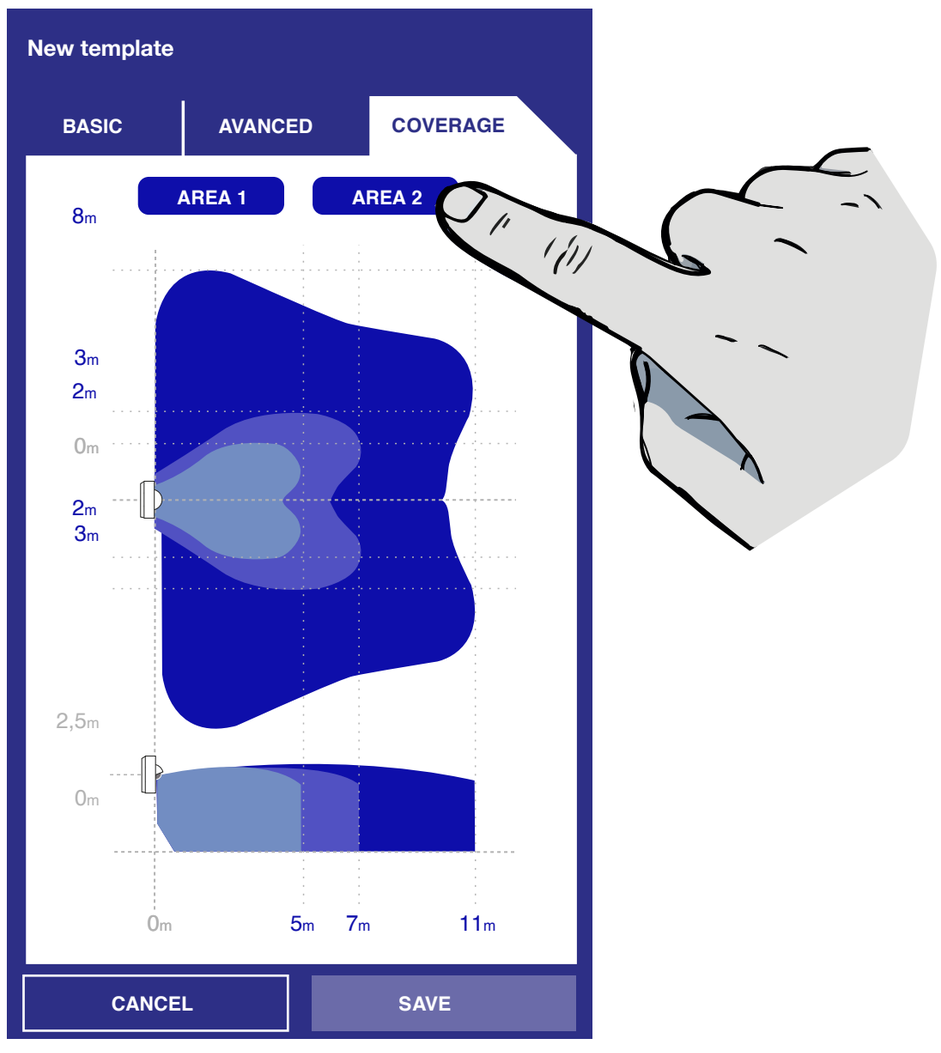

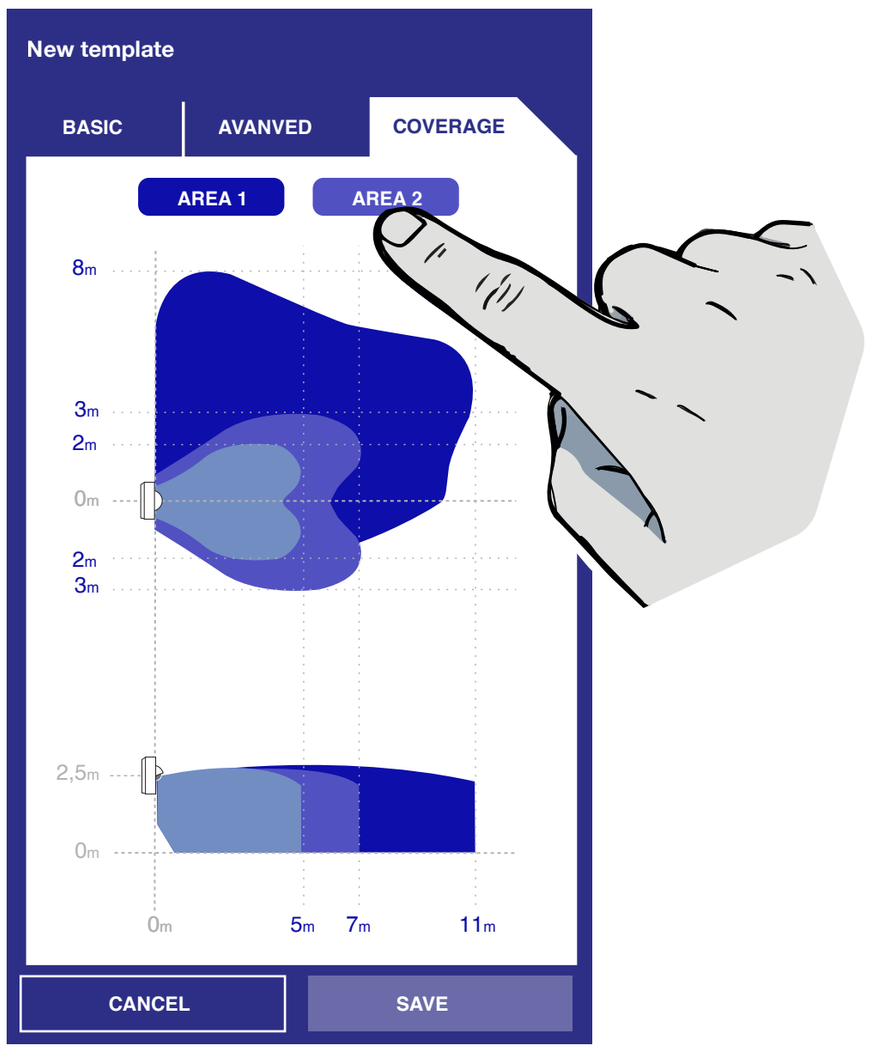

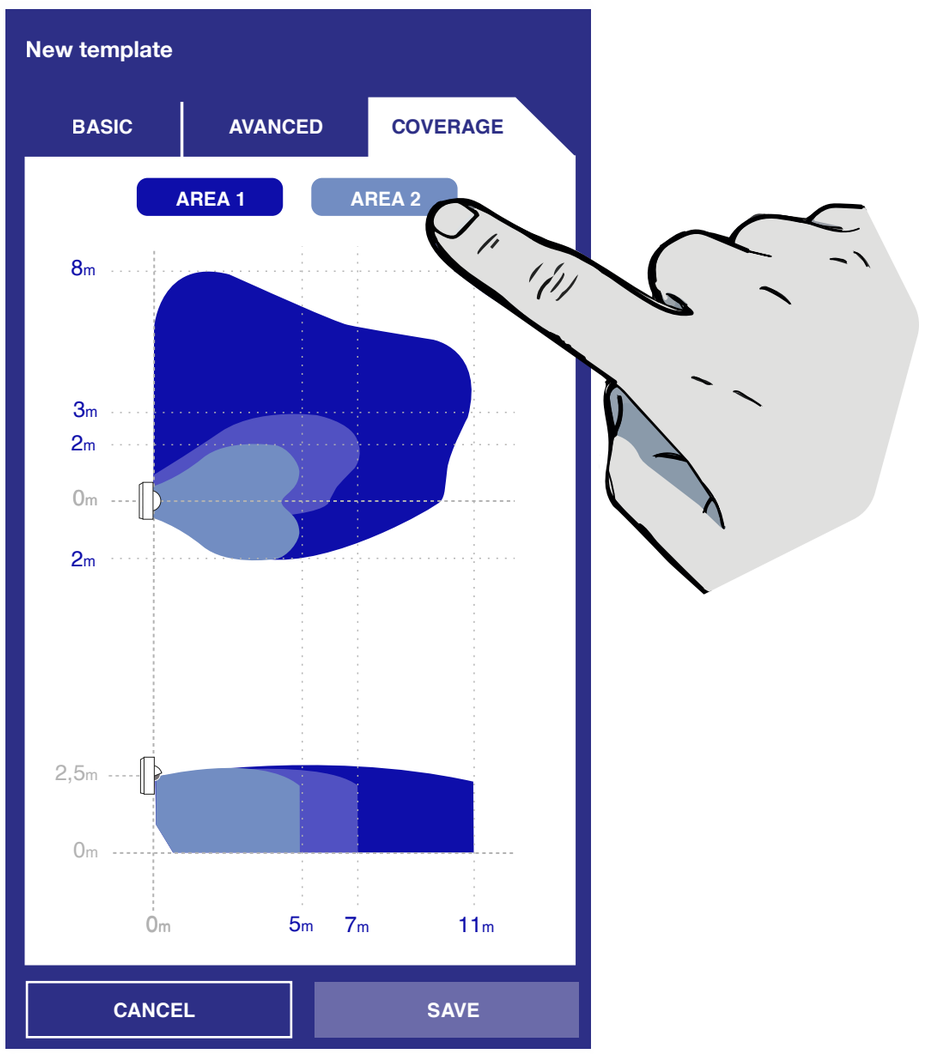

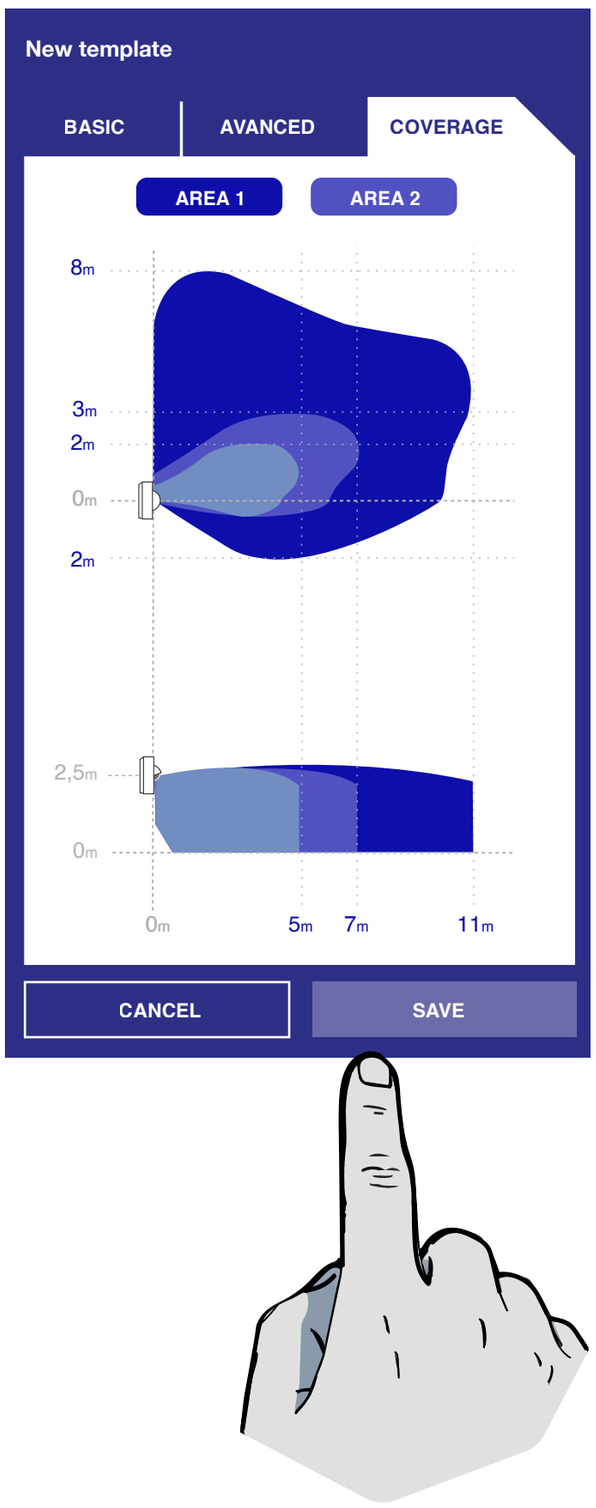

- Once configured, press « SAVE » to finish the configuration.

6 Send configuration.

- Pressing « SEND » makes the system detect nearby devices of the same type as the configured template. After selecting the correct device, the system will indicate a successful send with the message « Configuration sent ».

- If the configuration has been sent correctly, the connected load will flash **3 times** to confirm the configuration..

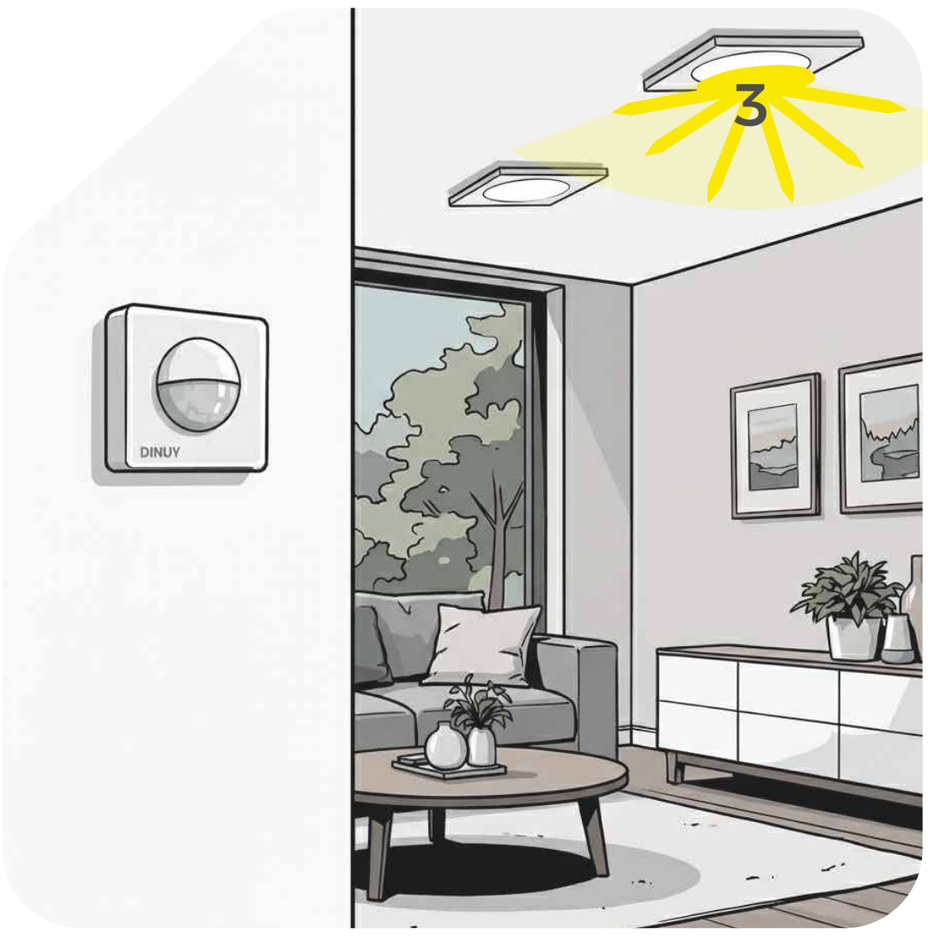

Auzolan 2
20303 IRUN
T (+34) 943 62 79 88
E soporte@dinuy.com