## NECO

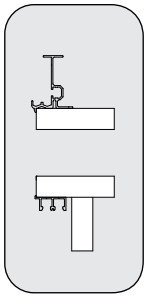

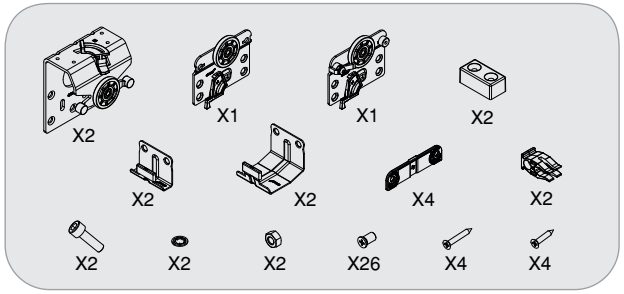


Frenos / Freni / Stopper / Butées / Travões

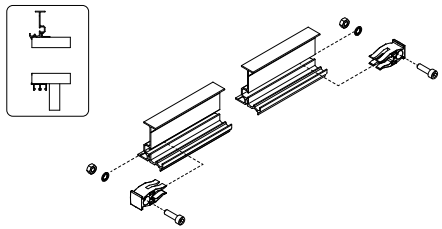

Frenos / Freni / Stopper / Butées / Travões
3 puertas / 3 ante / 3 door / 3 portes / 3 portas

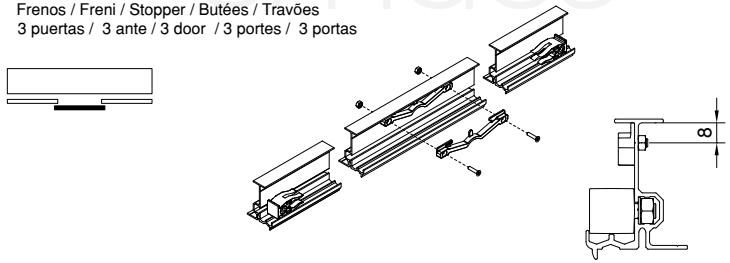


**Mecanizado carril / Forature** binario **/ Upper track drilling / Usinage rail / Mecanização calha**

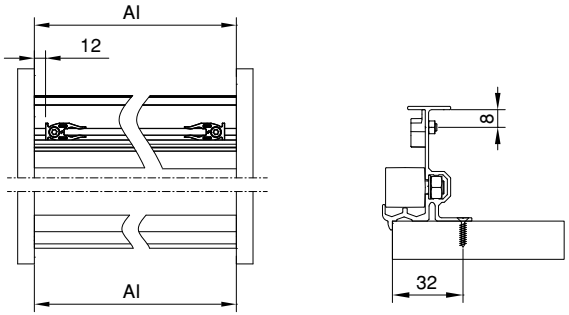


Al: Anchura interior armario / Larghezza interna armadio / Internal module width
Largura interior do módulo / Largeur intérieure du module

Mecanizado de puertas / Forature delle ante / Drilling size doors
Usinage portes / Mecanização da porta

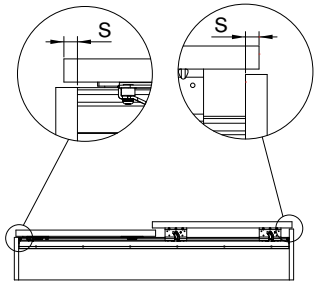


S = Solape puerta con costado
Sormonto anta sul fianco
Door to side overlap
Chevauchement
Sobreposição da ilharga

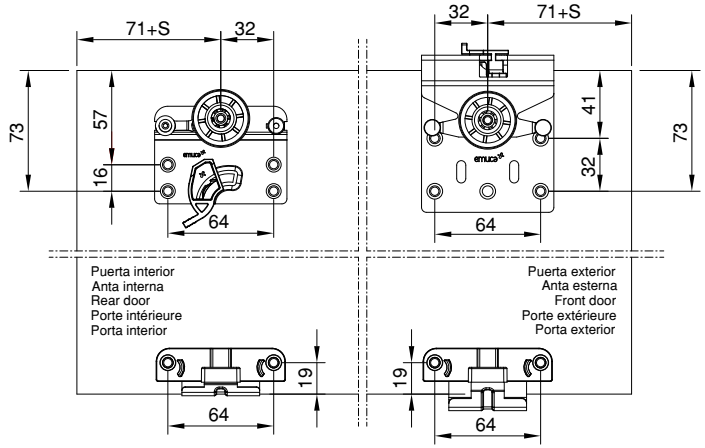


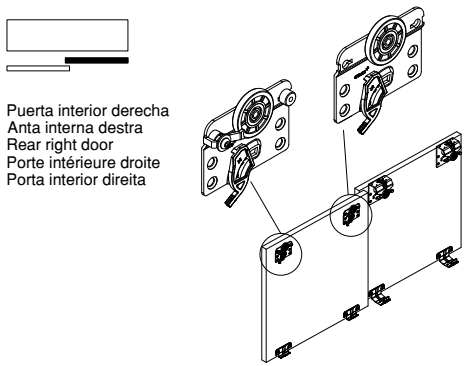

Puerta interior derecha
Anta interna destra
Rear right door
Porte intérieure droite
Porta interior direita

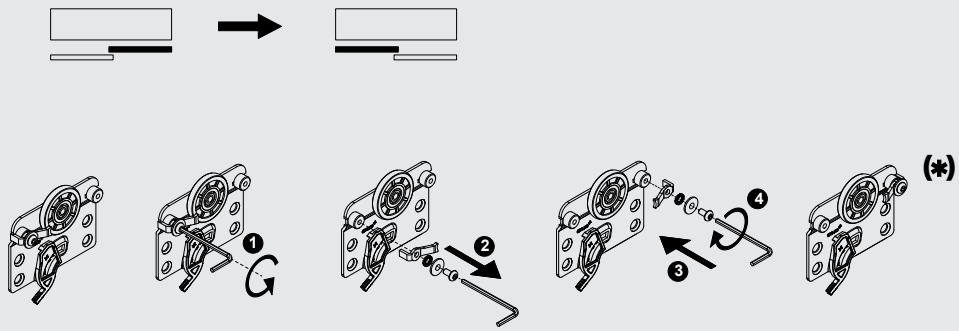


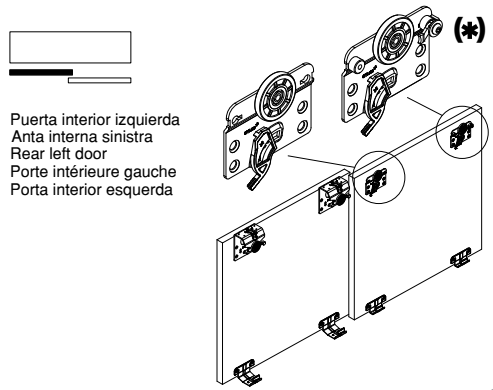


Puerta interior izquierda
Anta interna sinistra
Rear left door
Porte intérieure gauche
Porta interior esquerda

emuca

EMUCA, S.A.
Valencia (España)
Tel: +34 96 166 70 19
Fax: +34 96 166 71 82

EMUCA, S.r.l.
Padova (Italy)
Tel: 0039+ 0498702800
Fax: 0039+ 0498703019

EMUCA, Ltd.
Basildon ESSEX (United Kingdom)
Tel: +44 1268 530674
Fax: +44 1268 828592

EMUCA, Sarl.
Paris (France)
Tel: 02 49880735

EMUCA, Lda.
Lisboa (Portugal)
Tel: +34 96 166 70 19
Fax: +34 96 166 71 82

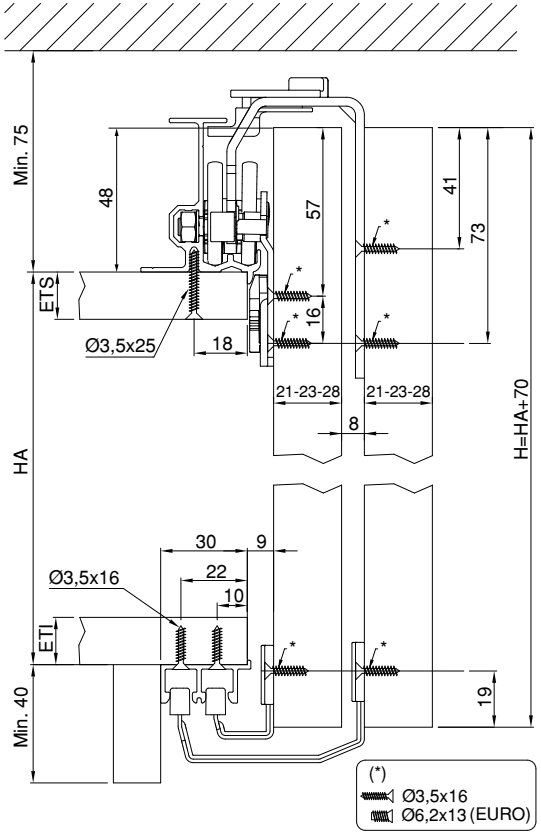


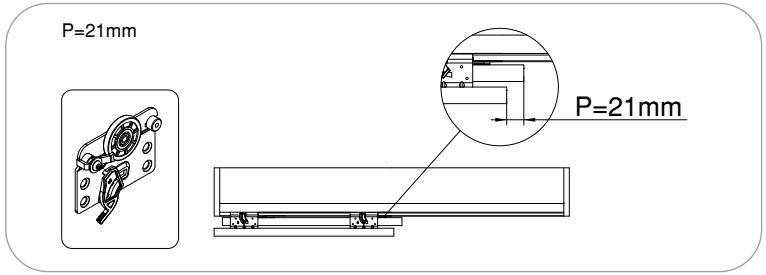


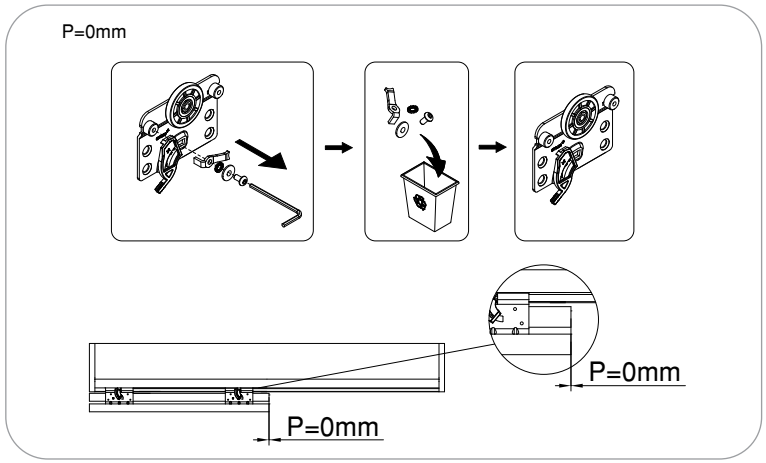


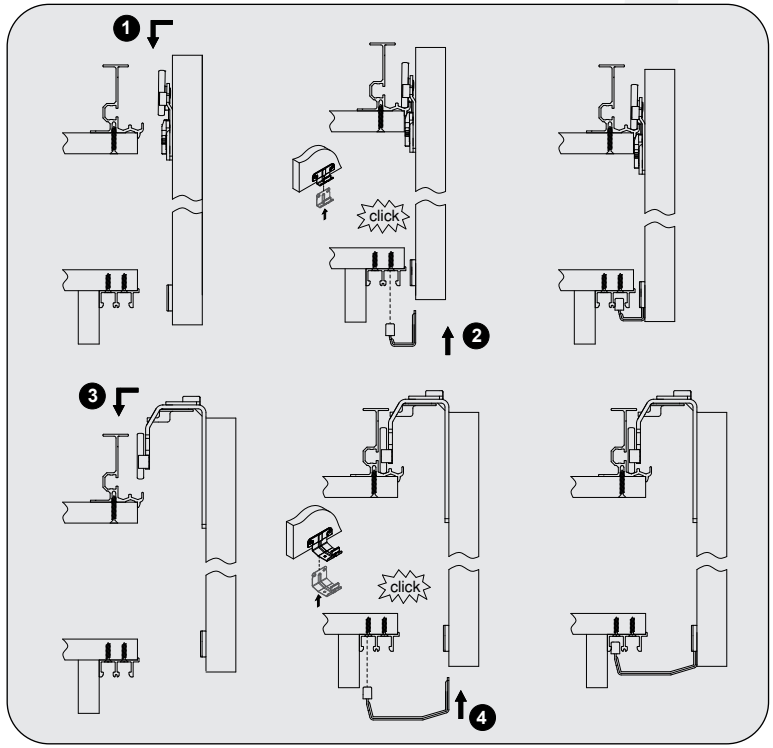


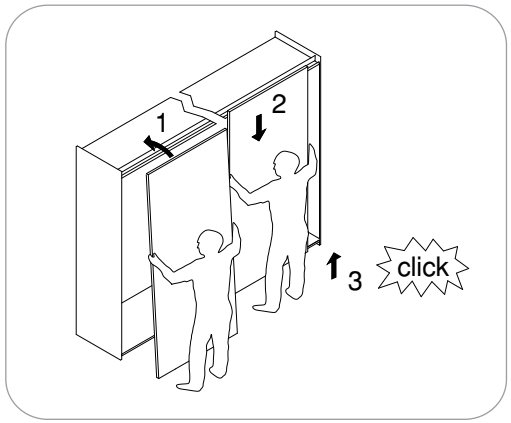


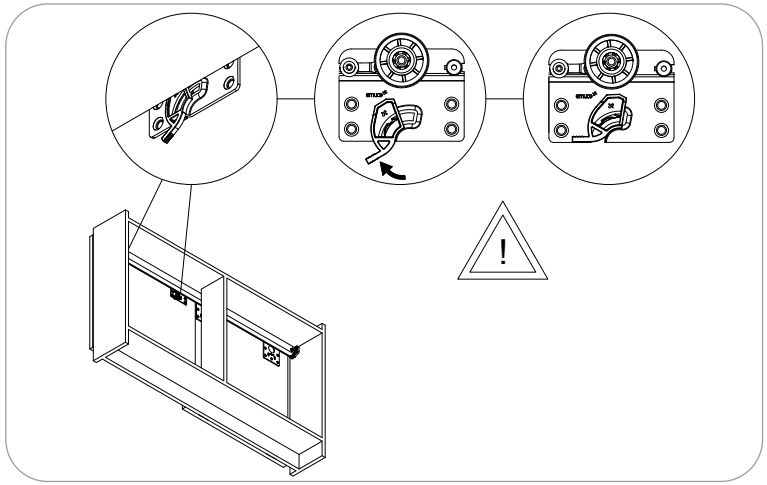

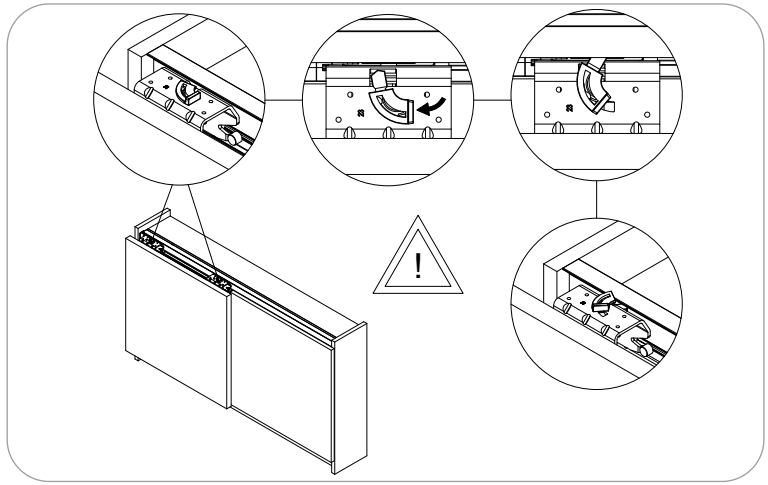

emuca
EMUCA, S.A.
Valencia (España)
Tel: +34 96 166 70 19
Fax: +34 96 166 71 82

EMUCA, S.r.l.
Padova (Italy)
Tel: 0039+ 0498702800
Fax: 0039+ 0498703019

EMUCA, Ltd.
Basildon ESSEX (United Kingdom)
Tel: +44 1268 530674
Fax: +44 1268 828592

EMUCA, Sarl.
Paris (France)
Tel: 02 49880735

EMUCA, Lda.
Lisboa (Portugal)
Tel: +34 96 166 70 19
Fax: +34 96 166 71 82