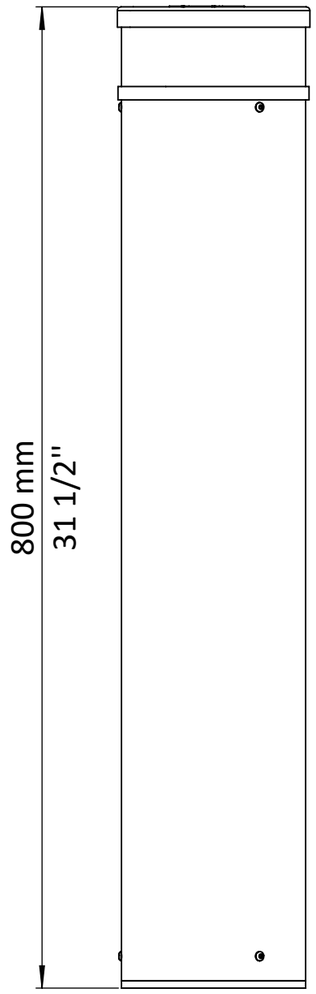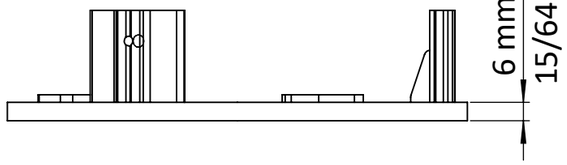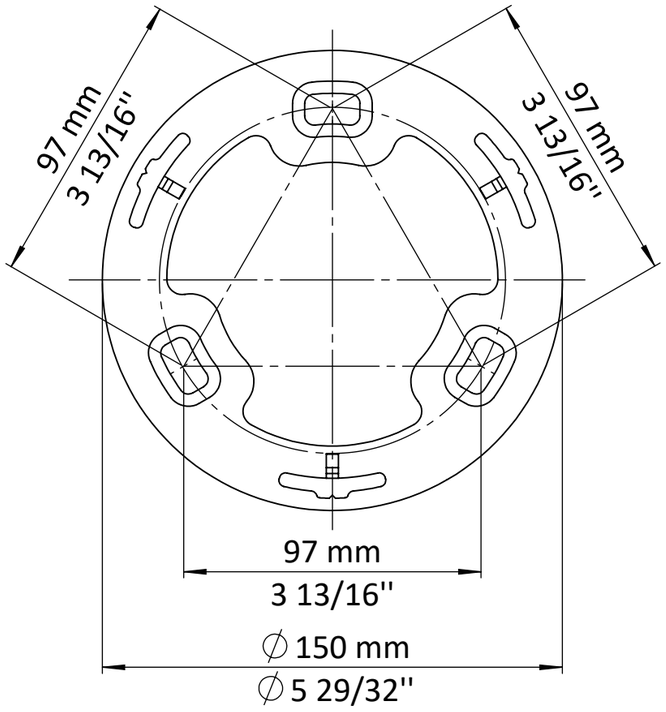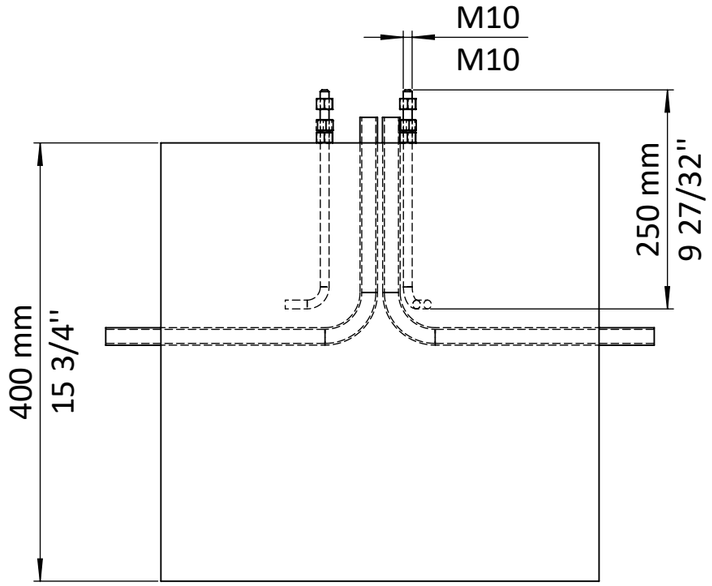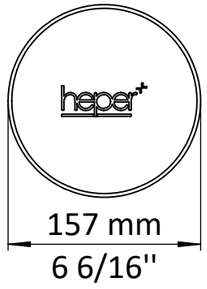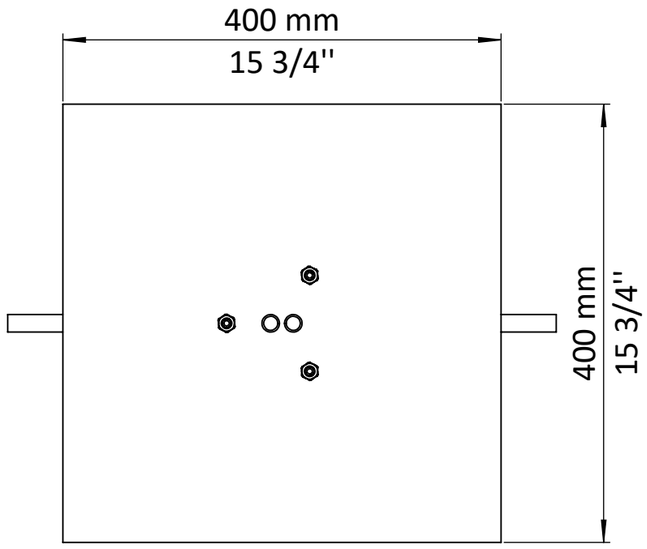TROLI
LB6009.693