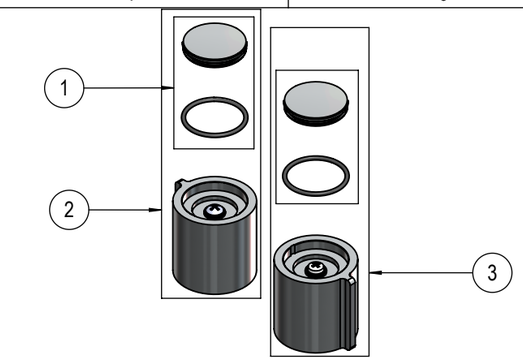

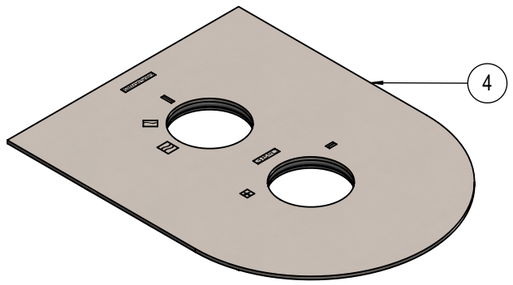

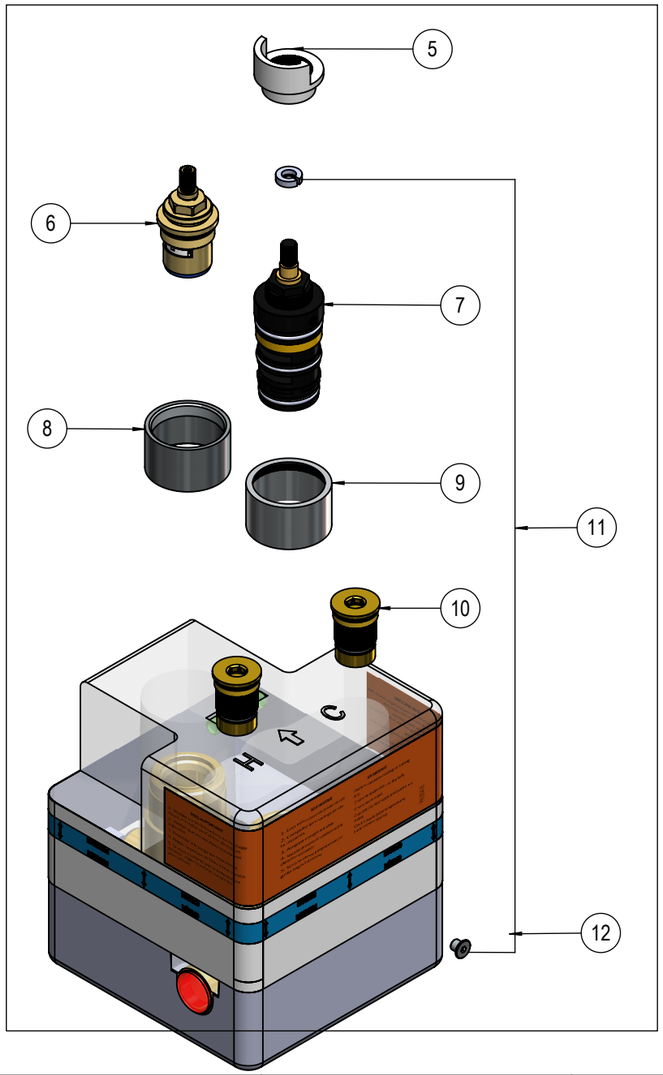

Nº	Qty	Reference	Denomination	Material	Finish
12	1	AAZ302560	XX2411 CONCEALED THERMOSTATIC 1 WAY WITH BOX		
11	1	AAZ302972	BAC9 ACCESORY BAG FOR XX2411 & XX8712		
10	2	AAZ302974	FTE02 CONCEALED THERMOSTATIC FILTER FOR XX2411 & XX8712		
9	1	AAZ302973	CEMPTE01 CONCEALED SHIRT 1703T 1/2 WAYS		
8	1	AAZ302979	CEMPMO01 CERAMIC FRAME SHIRT 1703C 3/4" 1 WAY		
7	1	AAZ302240	1703T THERMOSTATIC CARTRIDGE TERMOTECH		
6	1	AAZ302978	1703C 3/4" CERAMIC FRAME 1/4V FOR XX2411 Y XX8712		
5	1	AAZ302971	ALT7 WHITE LIMITER RING TEMP. FOR XX2411 & XX8712		
4	1	AAZ302562	KTU1 WALL PLATE CONCEALED THERMOSTATIC 1 WAY		
3	1	26Z302747	265000 HANDLE WHEEL SET NEUTRAL WITH BUTTON AROLA		
2	1	26Z302748	265100 HANDLE WHEEL SET NEUTRAL WITHOUT BUTTON AROLA		
1	2	AAZ300630	3761NE SET HANDLE WHEEL COVER NEUTRAL + O-RING		

Denomination

262411 S (XX2411+KTC1+265100+265000)

Ramon Soler
www.ramonsoler.net

Realized	**J. Romero**	**06/02/2019**	Material		Page **1/1**	Ref. RSB	
Approved	**J. Ramírez**	**08/07/2019**	Weight		Sheet **A3**		
Scale **1:3**	General tolerances acording to					Reference	**26DE02529**