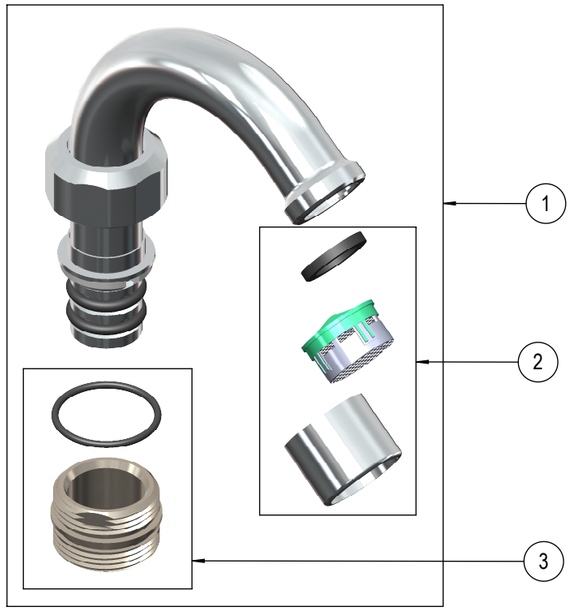

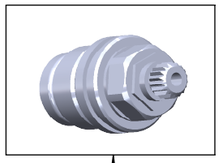

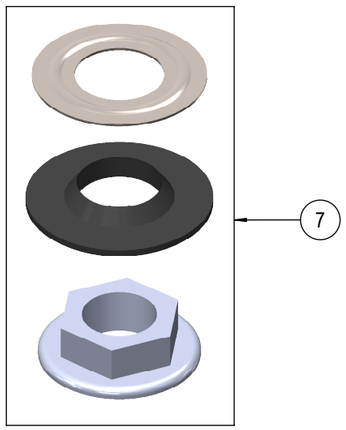

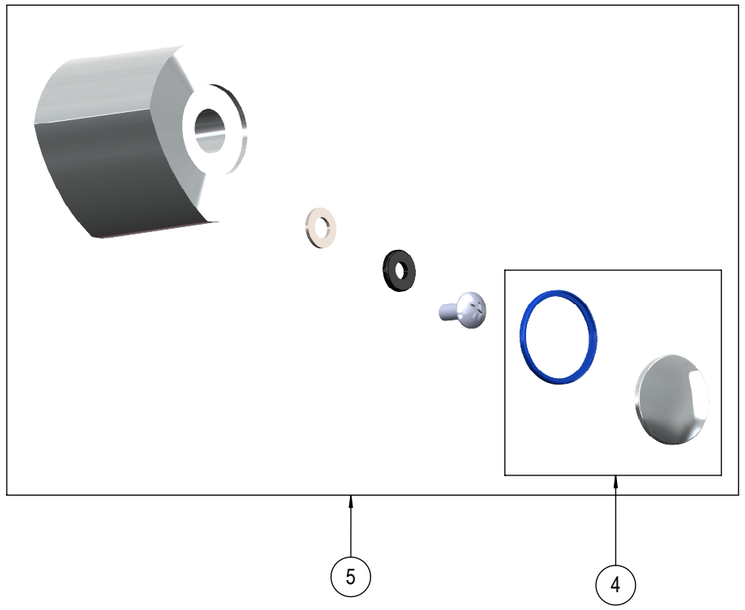

Nº	Qty	Reference	Denomination	Material	Finish
7	1	AA-300054	BAC7 ACCESORY BAG FOR 7002 AND 7012 ECO	-	
6	1	AA-800413	5000 CERAMIC FRAME SERIE ECO	-	
5	1	70-197322	HANDLE WHEEL CHROMED ECO-4 BLUE (VOE4A)	Brass	Chromed
4	1	70-801564	IE4A INDEX + HANDLE WHEEL COVER E4 BLUE	-	Chromed
3	1	AA-222414	1400 ADAPTER FOR SPOUT TUBE	-	
2	1	AA-154228	1510 AERATOR FEMALE M22x1 TYPE S	-	Chromed
1	1	AA-228858	CE11 CHROMED TUBE SPOUT BIDE	Brass	Chromed

Denomination

7028 (x1) CE11 E4A GIRATORY VERTICAL SPOUT COLD WATER

Ramon Soler®
www.ramonsoler.net

Realized	**C. Rosas**	**19/11/2019**	Material		Page **1/1**	Ref. RSB	
Approved	**J. Ramírez**	**27/11/2019**	Weight	**571.59 grs**	Sheet **A3**		
Scale **1:5**	General tolerances acording to					Reference	**70-E61614**