Doc. Number :

☐ Tentative Specification
☐ Preliminary Specification
■ Approval Specification

MODEL NO.: G215HCJ
SUFFIX: L01

Customer: Common

APPROVED BY **SIGNATURE**

Name / Title _____ _____
Note
Product Version

Please return 1 copy for your confirmation with your signature and comments.

Approved By	Checked By	Prepared By
Matt Chen	Sen Lin	Ken Hsu

CONTENTS

REVISION HISTORY

Version	Date	Page	Description
2.0	Nov.2020	All	Approval spec was first issued.
2.1	Feb.2021	5	2.MECHANICAL SPECIFICATIONS To modify the tolerance of module size and bezel area：±0.5→.±0.7mm Also modify the bezel area – Vertical. (Including outline drawing)
		28-29	To revise the wording of 9.2 STORAGE PRECAUTIONS ＆ 9.6 OTHER

1. GENERAL DESCRIPTION

1.1 OVERVIEW

G215HCJ-L01 is a 21.5" TFT Liquid Crystal Display IAV module with WLED Backlight unit and 30 pins 2ch-LVDS interface. This module supports 1920 x 1080 Full HD mode and can display up to 16.7M colors. The converter module for Backlight is built in.

1.2 GENERAL SPECIFICATIONS

Item	Specification	Unit	Note
Screen Size	21.5" real diagonal		
Driver Element	a-si TFT active matrix	-	-
Pixel Number	1920 x R.G.B. x 1080	pixel	-
Pixel Pitch	0.24795 (H) x 0.24795 (V)	mm	-
Pixel Arrangement	RGB vertical stripe	-	-
Display Colors	16.7M(8bit)	color	-
Transmissive Mode	Normally Black	-	-
Surface Treatment	AG type, 3H hard coating, Haze 25	-	-
Luminance, White	400	Cd/m2	
Color Gamut	72% of NTSC(Typ.)	-	-
Display Orientation	Signal input with " INX"		(2)
RoHS,Halogen Free	RoHS, Halogen Free		
Power Consumption	Total 22.35.W (Max.) @ cell 4.05W (Max.), BL 16.8.W (Max.)		(1)

Note (1) The specified power consumption : Total= cell (reference 4.3.1)+BL (reference 4.3.3)

Note (2)

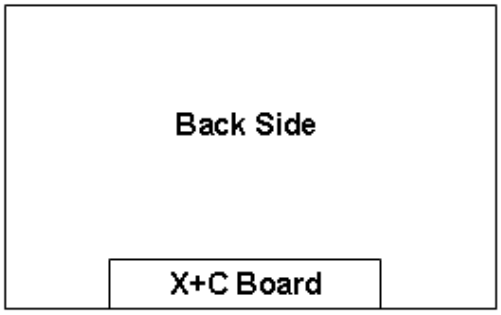

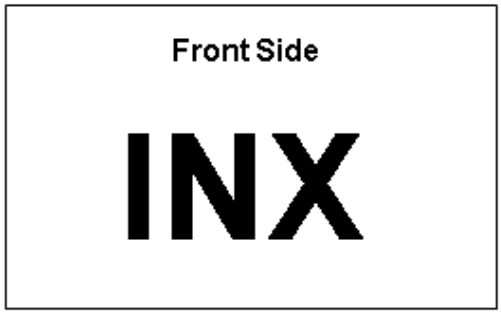

2. MECHANICAL SPECIFICATIONS

Item		Min.	Typ.	Max.	Unit	Note
Module Size	Horizontal (H)	496.9	497.6	498.3	mm	(1)
	Vertical (V)	286.3	287	287.7	mm	
	Thickness (T)	13.02	13.52	14.02	mm	
Bezel Area	Horizontal	478.6	479.3	480	mm	
	Vertical	270.3	271	271.7	mm	
Active Area	Horizontal	-	476.064	-	mm	
	Vertical	-	267.786	-	mm	
Weight		1870	1948	2026	g	

Note (1) Please refer to the attached drawings for more information of front and back outline dimensions.

3. ABSOLUTE MAXIMUM RATINGS

3.1 ABSOLUTE RATINGS OF ENVIRONMENT

Item	Symbol	Value		Unit	Note
		Min.	Max.		
Storage Temperature	TST	-20	60	ºC	(1) (2), (3)
Operating Temperature	TOP	0	60	ºC	

Note (1) 90 %RH Max.

Note (2) Wet-bulb temperature should be 39 ºC Max.

Note (3) Operating temperature is defined as panel surface temperature which should be 60℃ max

3.2 ELECTRICAL ABSOLUTE RATINGS

3.2.1 TFT LCD MODULE

Item	Symbol	Value		Unit	Note
		Min.	Max.		
Power Supply Voltage	VCCS	-0.3	6.0	V	(1)
Logic Input Voltage	V_{IN}	-0.3	3.6	V	

3.2.2 BACKLIGHT UNIT

Item	Symbol	Value			Unit	Note
		Min.	Typ	Max.		
Converter Voltage	LED_V_{in}	0.3	12.0	18.0	V	(1), (2) Duty=100%
Enable Voltage	LED_EN	0.3	3.3	5.5	V	
Backlight Adjust	LED_PWM	0.3	3.3	5.5	V	(1), (2) Pulse Width≦10msec. and Duty≦10%

Note (1) Permanent damage to the device may occur if maximum values are exceeded. Function operation should be restricted to the conditions described under Normal Operating Conditions.

Note (2) Specified values are for input pin of LED light bar at Ta=25±2 ℃ (Refer to 4.3.3 and 4.3.4 for further information).

4. ELECTRICAL SPECIFICATIONS

4.1 FUNCTION BLOCK DIAGRAM

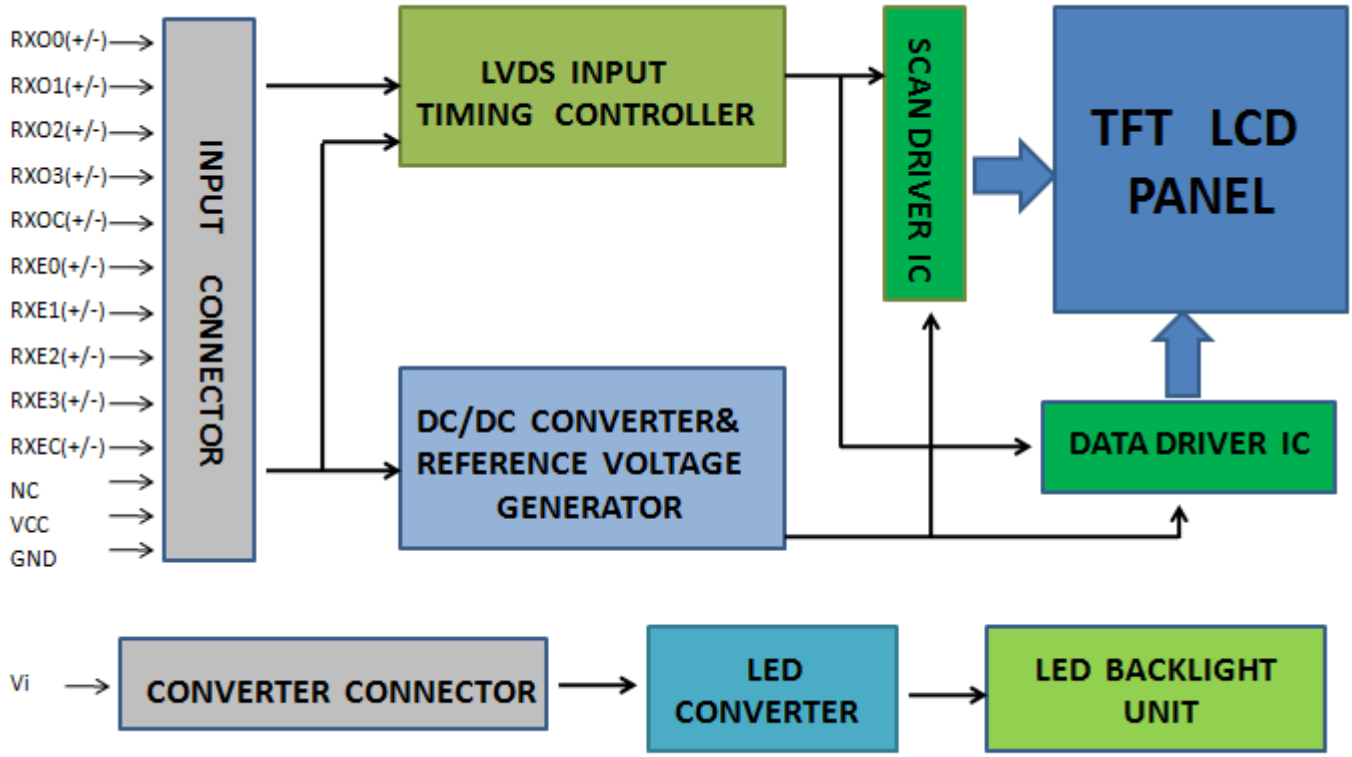

4.2. INTERFACE CONNECTIONS

PIN ASSIGNMENT

Pin	Name	Description
1	RXO0-	Negative LVDS differential data input. Channel O0 (odd)
2	RXO0+	Positive LVDS differential data input. Channel O0 (odd)
3	RXO1-	Negative LVDS differential data input. Channel O1 (odd)
4	RXO1+	Positive LVDS differential data input. Channel O1 (odd)
5	RXO2-	Negative LVDS differential data input. Channel O2 (odd)
6	RXO2+	Positive LVDS differential data input. Channel O2 (odd)
7	GND	Ground
8	RXOC-	Negative LVDS differential clock input. (odd)
9	RXOC+	Positive LVDS differential clock input. (odd)
10	RXO3-	Negative LVDS differential data input. Channel O3(odd)
11	RXO3+	Positive LVDS differential data input. Channel O3 (odd)
12	RXE0-	Negative LVDS differential data input. Channel E0 (even)
13	RXE0+	Positive LVDS differential data input. Channel E0 (even)
14	GND	Ground
15	RXE1-	Negative LVDS differential data input. Channel E1 (even)
16	RXE1+	Positive LVDS differential data input. Channel E1 (even)
17	GND	Ground
18	RXE2-	Negative LVDS differential data input. Channel E2 (even)
19	RXE2+	Positive LVDS differential data input. Channel E2 (even)
20	RXEC-	Negative LVDS differential clock input. (even)
21	RXEC+	Positive LVDS differential clock input. (even)
22	RXE3-	Negative LVDS differential data input. Channel E3 (even)
23	RXE3+	Positive LVDS differential data input. Channel E3 (even)
24	GND	Ground
25	NC	For LCD internal use only, Do not connect
26	NC	For LCD internal use only, Do not connect
27	NC	For LCD internal use only, Do not connect
28	Vcc	+5.0V power supply
29	Vcc	+5.0V power supply
30	Vcc	+5.0V power supply

Note (1) Connector Part No.:

P-TWO:187098-30091 or FCN:WF13-422-3033 or Foxconn:GS23301-0321R-7H

Note (2) User's connector Part No:

Mating Wire Cable Connector Part No.: FI-X30H(JAE) or FI-X30HL(JAE)

Mating FFC Cable Connector Part No.: 217007-013001 (P-TWO) or JF05X030-1 (JAE).

Note (3) The first pixel is odd.

Note (4) Input signal of even and odd clock should be the same timing.

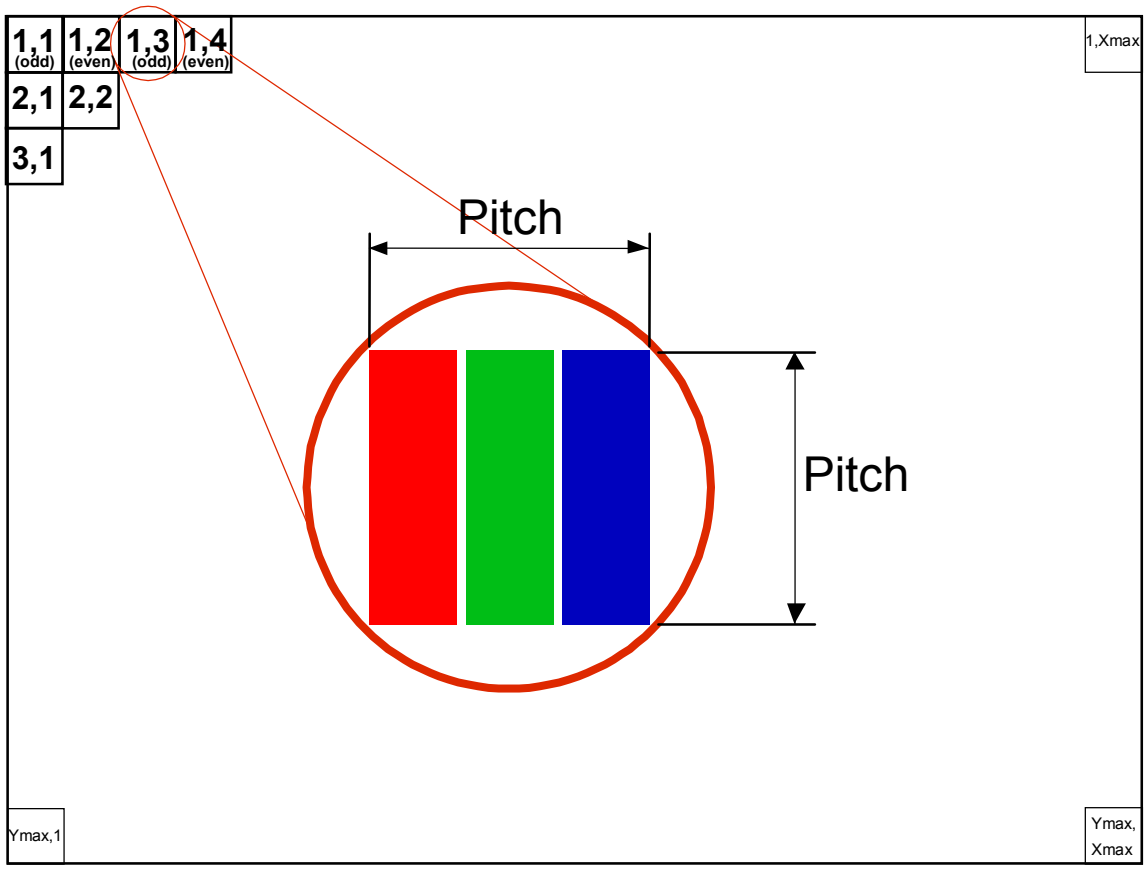

4.3 ELECTRICAL CHARACTERISTICS

4.3.1 LCD ELETRONICS SPECIFICATION

Parameter		Symbol	Value			Unit	Note
			Min.	Typ.	Max.		
Power Supply Voltage		Vcc	4.5	5.0	5.5	V	-
Ripple Voltage		V_{RP}	-	-	300	mV	-
Rush Current		I_{RUSH}	-	-	3	A	(2)
Power Supply Current	White	-	-	550	640	mA	(3)a
	Black	-	-	530	620	mA	(3)b
	Vertical Stripe	-	-	700	810	mA	(3)c
Power Consumption		PLCD	-	3.5	4.05	Watt	(4)
LVDS interface	Differential Input Voltage	V_{ID}	100	-	600	mV	
	Common Input Voltage	V_{CM}	1.0	1.2	1.4	V	
	Differential Input High Threshold Voltage	V_{TH}	-	-	+100	mV	
	Differential Input Low Threshold Voltage	V_{TL}	-100	-	-	mV	

Note (1) The ambient temperature is Ta = 25 ± 2 ºC.

Note (2) Measurement Conditions:

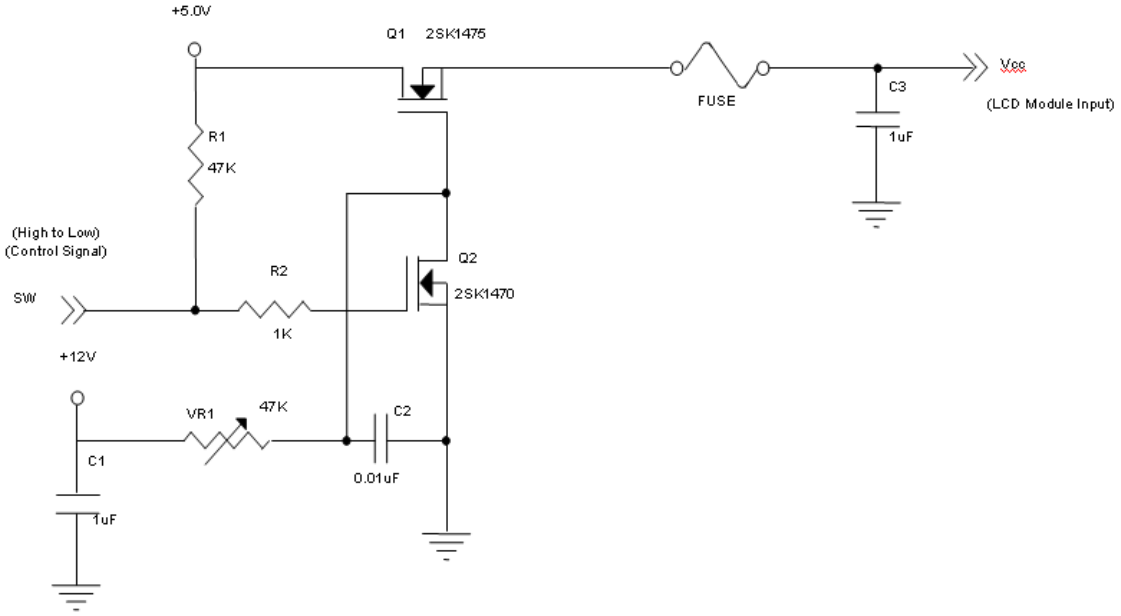

Vcc rising time is 470µs

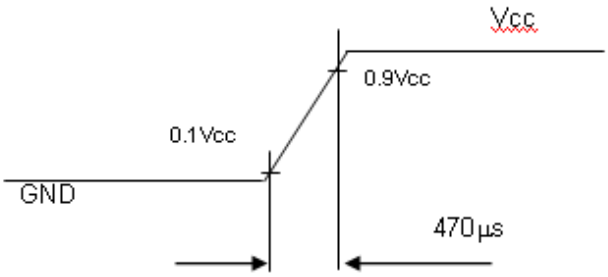

Note (3) The specified power supply current is under the conditions at Vcc = 5.0 V, Ta = 25 ± 2 °C, Fr = 60Hz, whereas a power dissipation check pattern below is displayed.

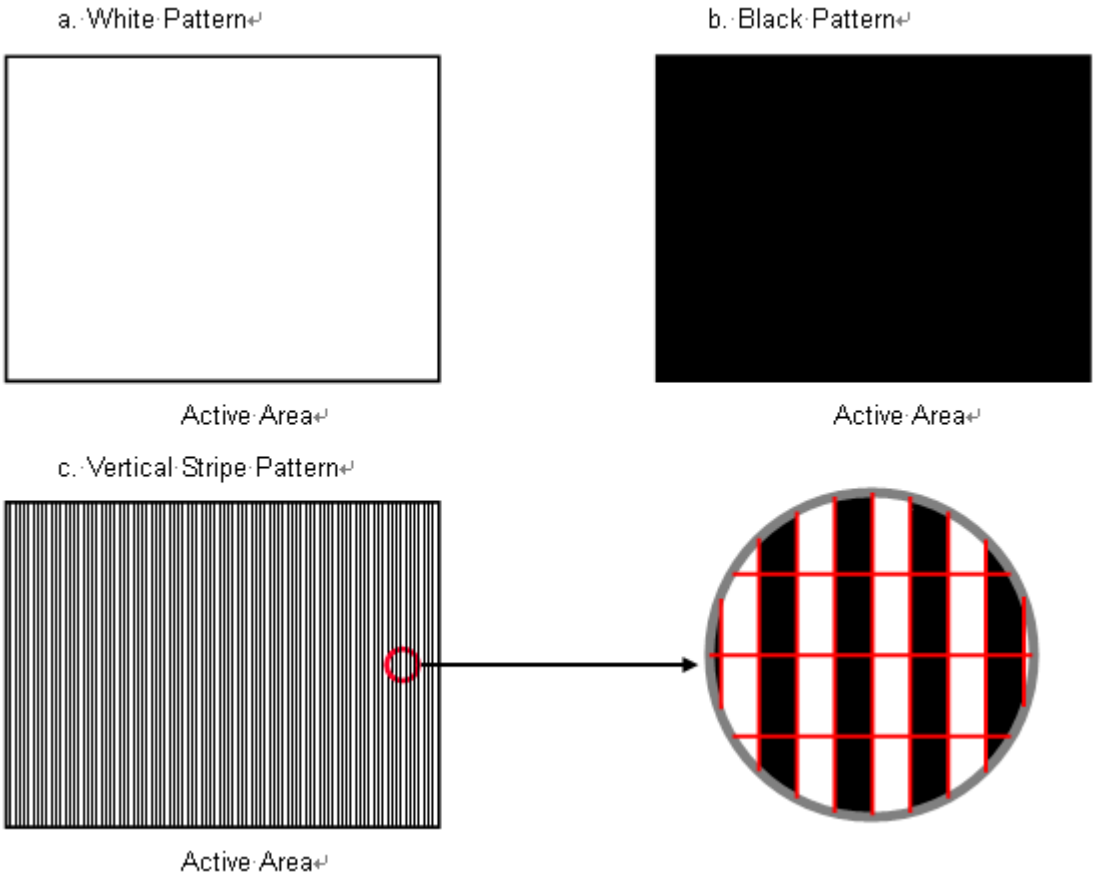

Note (4) The power consumption is specified at the pattern with the maximum current.

Note (5) The LVDS input characteristics are as follows:

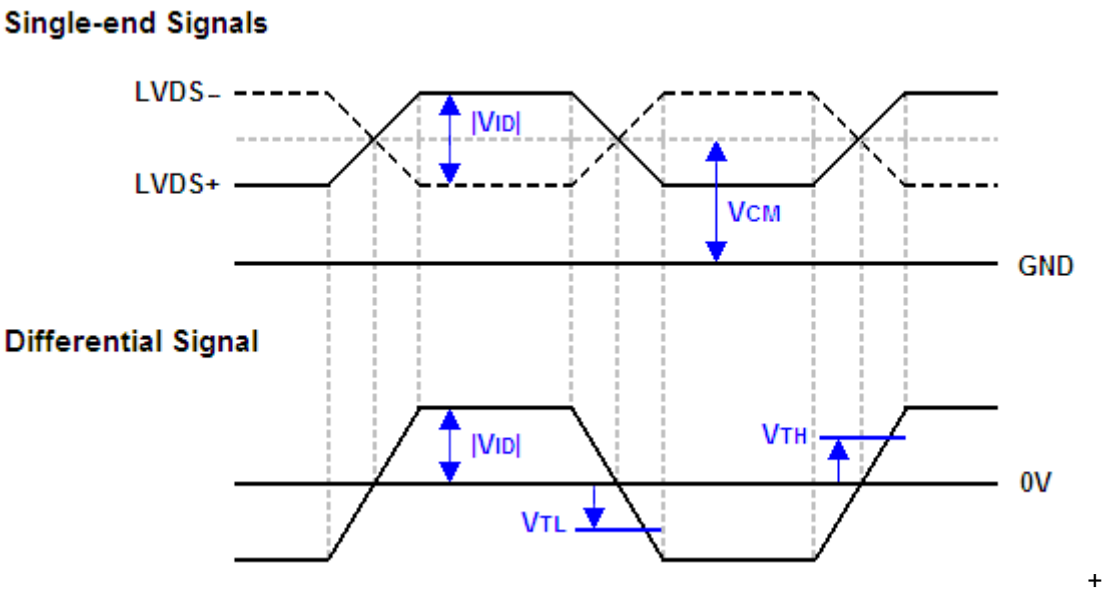

4.3.2 VCC POWER DIP CONDITION

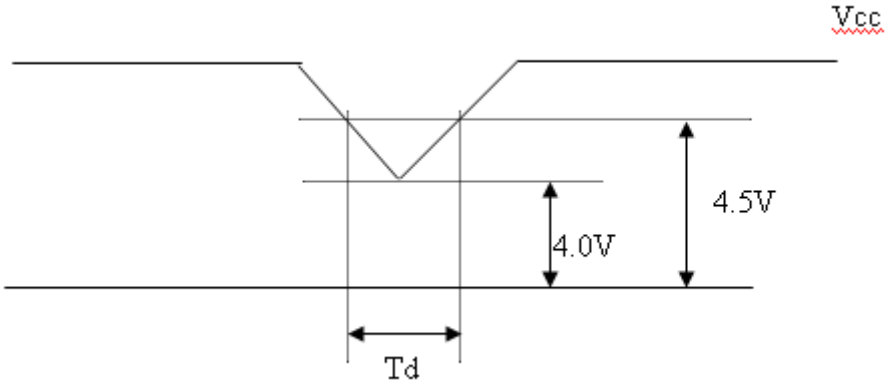

4.3.3 BACKLIGHT UNIT

Parameter		Symbol	Value			Unit	Note
			Min.	Typ.	Max.		
LED Converter input voltage		V_i	10.8	12.0	13.2	V_{DC}	(Duty 100%)
LED Converter input ripple voltage		Vi_{RP}	-	-	500	mV	
LED Converter input current		I_i	1.0	1.2	1.4	A_{DC}	@ Vi = 12V (Duty 100%)
LED Converter inrush current		I_{iRUSH}	-	-	5.0	A	@ Vi rising time=10ms (Vi=12V)
Input Power Consumption		P_i	-	14.4	16.8	W	(1)
EN Control Level	Backlight on	ENLED (BLON)	2.5	3.3	5.0	V	
	Backlight off		0	--	0.3		
PWM Control Level	PWM High Level	Dimming (E_PWM)	2.5	--	5.0	V	
	PWM Low Level		0	0	0.15		
PWM Noise Range		V_{Noise}	-	-	0.1	V	
PWM Control Frequency		f_{PWM}	190	200	20k	Hz	(3)
PWM Control Duty Ratio		-	5		100	%	(3), @190Hz<f_{PWM}<1kHz
			20		100	%	(3), @1kHz≦f_{PWM}<20kHz
LED Life Time		L_L	50,000			Hrs	(2)

Note (1) LED current is measured by utilizing a high frequency current meter as shown below:

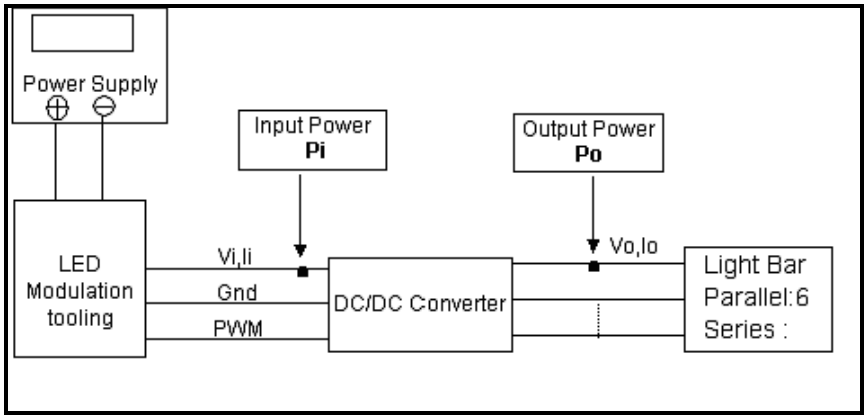

Note (2) The lifetime of LED is estimated data and defined as the time when it continues to operate under the conditions at Ta = 25 ±2 °C and Duty 100% until the brightness becomes ≦ 50% of its original value. Operating LED at high temperature condition will reduce life time and lead to color shift.

Note (3) At 190 ~1kHz PWM control frequency, duty ratio range is restricted from 5% to 100%.1K ~20kHz PWM control frequency, duty ratio range is restricted from 50% to 100%. If PWM control frequency is applied in the range from 1KHz to 20KHZ, The "non-linear" phenomenonon the Backlight Unit may be found. So It's a suggestion that PWM control frequency should be less than 1KHz.

4.3.4 POWER CONNECTOR PIN ASSIGNMENT

CN1

Pin	Symbol	Description
1	GND	Ground
2	GND	Ground
3	GND	Ground
4	LED PWM	PWM Dimming HI 3.3V ; LOW 0V
5	LED EN	ENABLE 3.3V
6	NC	NC
7	VIN	12V Input Power
8	VIN	12V Input Power
9	VIN	12V Input Power

Note (1) Connector(wire type): STM(MS2409HJ) or equivalent.

Note (2) User's mating connector part No.: STM(P24049)

4.4 LVDS INPUT SIGNAL SPECIFICATIONS

4.4.1 LVDS DATA MAPPING TABLE

LVDS Channel O0	LVDS output	D7	D6	D4	D3	D2	D1	D0
	Data order	OG0	OR5	OR4	OR3	OR2	OR1	OR0
LVDS Channel O1	LVDS output	D18	D15	D14	D13	D12	D9	D8
	Data order	OB1	OB0	OG5	OG4	OG3	OG2	OG1
LVDS Channel O2	LVDS output	D26	D25	D24	D22	D21	D20	D19
	Data order	DE	NA	NA	OB5	OB4	OB3	OB2
LVDS Channel O3	LVDS output	D23	D17	D16	D11	D10	D5	D27
	Data order	NA	OB7	OB6	OG7	OG6	OR7	OR6
LVDS Channel E0	LVDS output	D7	D6	D4	D3	D2	D1	D0
	Data order	EG0	ER5	ER4	ER3	ER2	ER1	ER0
LVDS Channel E1	LVDS output	D18	D15	D14	D13	D12	D9	D8
	Data order	EB1	EB0	EG5	EG4	EG3	EG2	EG1
LVDS Channel E2	LVDS output	D26	D25	D24	D22	D21	D20	D19
	Data order	DE	NA	NA	EB5	EB4	EB3	EB2
LVDS Channel E3	LVDS output	D23	D17	D16	D11	D10	D5	D27
	Data order	NA	EB7	EB6	EG7	EG6	ER7	ER6

4.4.2 COLOR DATA INPUT ASSIGNMENT

The brightness of each primary color (red, green and blue) is based on the 8-bit gray scale data input for the color. The higher the binary input, the brighter the color. The table below provides the assignment of color versus data input.

Color		Data Signal																							
		Red								Green								Blue							
		R7	R6	R5	R4	R3	R2	R1	R0	G7	G6	G5	G4	G3	G2	G1	G0	B7	B6	B5	B4	B3	B2	B1	B0
Basic Colors	Black	0	0	0	0	0	0	0	0	0	0	0	0	0	0	0	0	0	0	0	0	0	0	0	0
	Red	1	1	1	1	1	1	1	1	0	0	0	0	0	0	0	0	0	0	0	0	0	0	0	0
	Green	0	0	0	0	0	0	0	0	1	1	1	1	1	1	1	1	0	0	0	0	0	0	0	0
	Blue	0	0	0	0	0	0	0	0	0	0	0	0	0	0	0	0	1	1	1	1	1	1	1	1
	Cyan	0	0	0	0	0	0	0	0	1	1	1	1	1	1	1	1	1	1	1	1	1	1	1	1
	Magenta	1	1	1	1	1	1	1	1	0	0	0	0	0	0	0	0	1	1	1	1	1	1	1	1
	Yellow	1	1	1	1	1	1	1	1	1	1	1	1	1	1	1	1	0	0	0	0	0	0	0	0
	White	1	1	1	1	1	1	1	1	1	1	1	1	1	1	1	1	1	1	1	1	1	1	1	1
Gray Scale Of Red	Red(0) / Dark	0	0	0	0	0	0	0	0	0	0	0	0	0	0	0	0	0	0	0	0	0	0	0	0
	Red(1)	0	0	0	0	0	0	0	1	0	0	0	0	0	0	0	0	0	0	0	0	0	0	0	0
	Red(2)	0	0	0	0	0	0	1	0	0	0	0	0	0	0	0	0	0	0	0	0	0	0	0	0
	:	:	:	:	:	:	:	:	:	:	:	:	:	:	:	:	:	:	:	:	:	:	:	:	:
	:	:	:	:	:	:		:		:		:		:	:	:			:		:	:	:	:	
	Red(253)	1	1	1	1	1	1	0	1	0	0	0	:0	0	0	0	0	0	0	0	0	0	0	0	:0
	Red(254)	1	1	1	1	1	1	1	0	0	0	0	0	0	0	0	0	0	0	0	0	0	0	0	0
	Red(255)	1	1	1	1	1	1	1	1	0	0	0	0	0	0	0	0	0	0	0	0	0	0	0	0
Gray Scale Of Green	Green(0) / Dark	0	0	0	0	0	0	0	0	0	0	0	0	0	0	0	0	0	0	0	0	0	0	0	0
	Green(1)	0	0	0	0	0	0	0	0	0	0	0	0	0	0	0	1	0	0	0	0	0	0	0	0
	Green(2)	0	0	0	0	0	0	0	0	0	0	0	0	0	0	1	0	0	0	0	0	0	0	0	0
	:	:	:	:	:	:	:	:	:	:	:	:	:	:	:	:	:	:	:	:	:	:	:	:	:
	:	:	:	:	:	:	:	:	:	:	:	:	:	:	:	:	:	:	:	:	:	:	:	:	:
	Green(253)	0	0	0	0	0	0	0	0	1	1	1	1	1	1	0	1	0	0	0	0	0	0	0	0
	Green(254)	0	0	0	0	0	0	0	0	1	1	1	1	1	1	1	0	0	0	0	0	0	0	0	0
	Green(255)	0	0	0	0	0	0	0	0	1	1	1	1	1	1	1	1	0	0	0	0	0	0	0	0
Gray Scale Of Blue	Blue(0) / Dark	0	0	0	0	0	0	0	0	0	0	0	0	0	0	0	0	0	0	0	0	0	0	0	0
	Blue(1)	0	0	0	0	0	0	0	0	0	0	0	0	0	0	0	0	0	0	0	0	0	0	0	1
	Blue(2)	0	0	0	0	0	0	0	0	0	0	0	0	0	0	0	0	0	0	0	0	0	0	1	0
	:	:	:	:	:	:	:	:	:	:	:	:	:	:	:	:	:	:	:	:	:	:	:	:	:
	:	:	:	:	:	:	:	:	:	:	:	:	:	:	:	:	:	:	:	:	:	:	:	:	:
	Blue(253)	0	0	0	0	0	0	0	0	0	0	0	0	0	0	0	0	1	1	1	1	1	1	0	1
	Blue(254)	0	0	0	0	0	0	0	0	0	0	0	0	0	0	0	0	1	1	1	1	1	1	1	0
	Blue(255)	0	0	0	0	0	0	0	0	0	0	0	0	0	0	0	0	1	1	1	1	1	1	1	1

Note (1) 0: Low Level Voltage, 1: High Level Voltage

4.5 DISPLAY TIMING SPECIFICATIONS

The input signal timing specifications are shown as the following table and timing diagram.

Signal	Item	Symbol	Min.	Typ.	Max.	Unit	Note
LVDS Clock	Frequency	Fc	57.5	74.25	97.98	MHz	
	Period	Tc	-	13.47		ns	
	Input cycle to cycle jitter	T_{rcl}	-0.02*TC	-	0.02*TC	ns	(1)
	Input Clock to data skew	TLVCCS	-0.02*TC		0.02*TC		(2)
	Spread spectrum modulation range	Fclkin_mod	0.97*FC	-	1.03*FC	MHz	(3)
	Spread spectrum modulation frequency	F_{SSM}	-	-	100	KHz	
Vertical Display Term	Frame Rate	Fr	49	60	77	Hz	
	Total	Tv	1110	1125	1251	Th	Tv=Tvd+Tvb-
	Active Display	Tvd	1080	1080	1080	Th	-
	Blank	Tvb	Tv-Tvd	Tv-Tvd	Tv-Tvd	Th	(4)
Horizontal Display Term	Total	Th	1050	1100	1150	Tc	Th=Thd+Thb
	Active Display	Thd	960	960	960	Tc	-
	Blank	Thb	Th-Thd	Th-Thd	Th-Thd	Tc	-

Note: Because this module is operated by DE only mode, Hsync and Vsync input signals are ignored.

Fc = Fr X Tv X Th

Please make sure the range of pixel clock has follow the below equation and Fc, Fr, Tv , Th not allowed to get beyond the min or max spec.

INPUT SIGNAL TIMING DIAGRAM

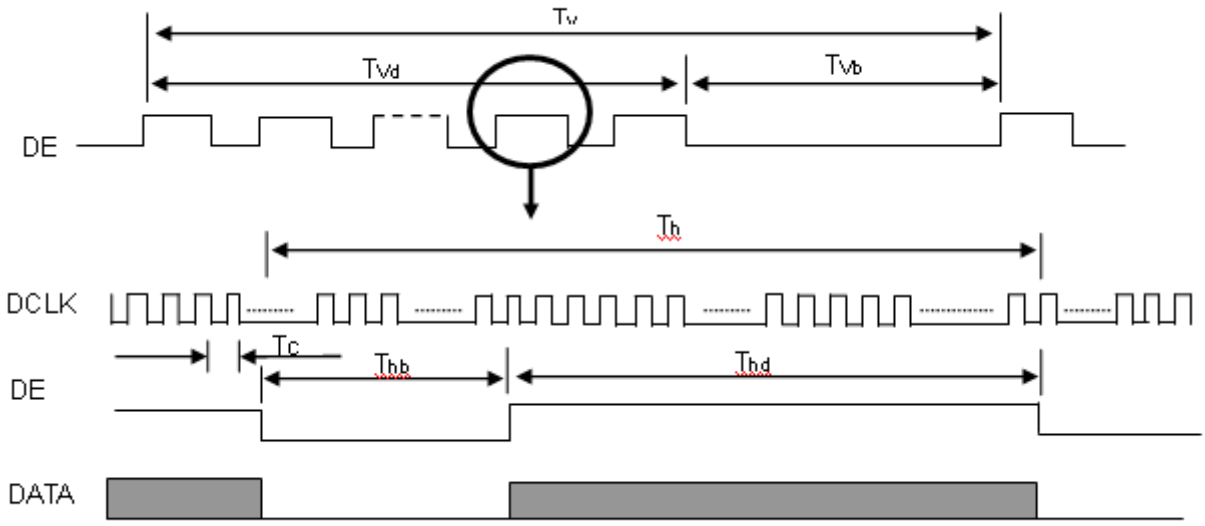

Note (1) The input clock cycle-to-cycle jitter is defined as below figures. Trcl = I T_1 – TI

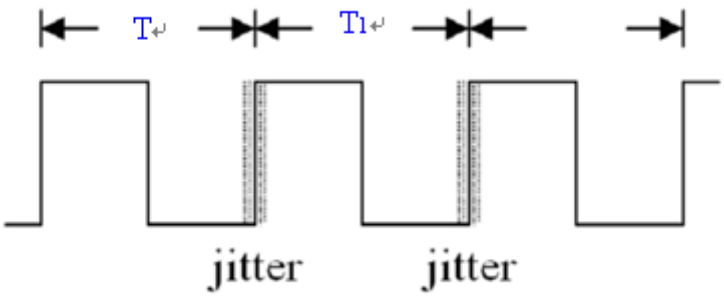

Note (2) Input Clock to data skew is defined as below figures.

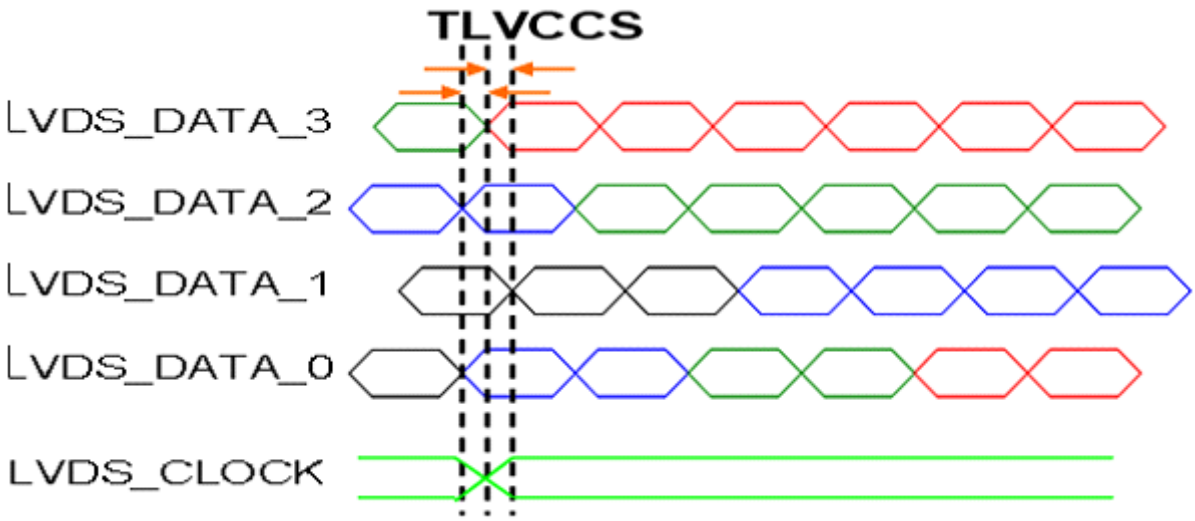

Note (3) The SSCG (Spread spectrum clock generator) is defined as below figures.

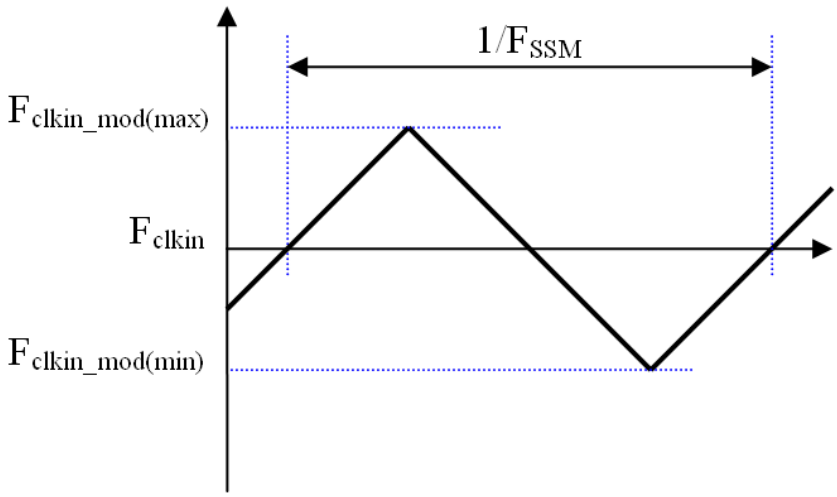

Note (4) The DCLK range at last line of V-blank should be set in 0 to Hdisplay/2

4.6 POWER ON/OFF SEQUENCE

The power sequence specifications are shown as the following table and diagram.

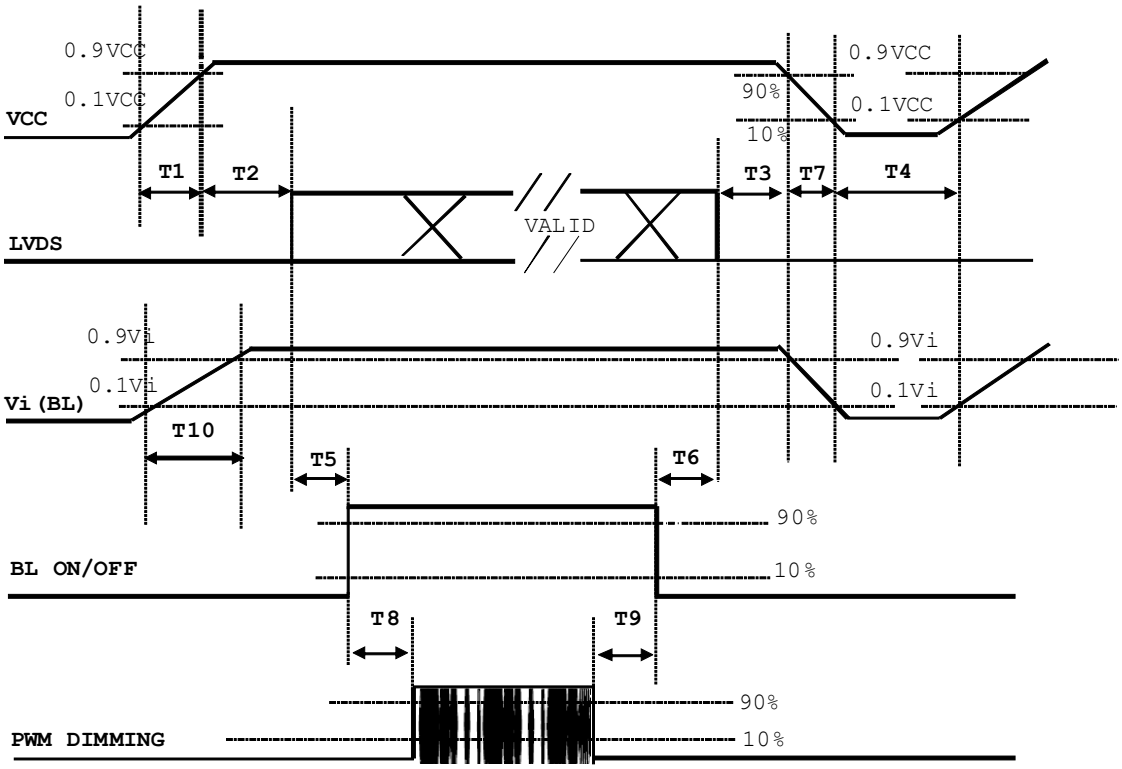

Timing Specifications:

Parameters	Values			Units	Note
	Min	Typ.	Max		
T1	0.5		10	ms	
T2	0		50	ms	
T3	0		50	ms	
T4	500		-	ms	
T5	450		-	ms	
T6	200		-	ms	
T7	10		100	ms	
T8	10		-	ms	
T9	10		-	ms	
T10	20		50	ms	

Note (1) The supply voltage of the external system for the module input should be the same as the definition of Vcc.

Note (2) When the backlight turns on before the LCD operation of the LCD turns off, the display may momentarily become abnormal screen.

Note (3) In case of VCC = off level, please keep the level of input signals on the low or keep a high impedance.

Note (4) T4 should be measured after the module has been fully discharged between power off and on period.

Note (5) Interface signal shall not be kept at high impedance when the power is on.

Note (6) INX won't take any responsibility for the products which are damaged by the customers not following the Power Sequence.

Note (7) There might be slight electronic noise when LCD is turned off (even backlight unit is also off). To avoid this symptom, we suggest "Vcc falling timing" to follow "T7 spec". Note (7) There might be slight electronic noise when LCD is turned off (even backlight unit is also off). To avoid this symptom, we suggest "Vcc falling timing" to follow "t6 spec".

5.OPTICAL CHARACTERISTICS

5.1 TEST CONDITIONS

Item	Symbol	Value	Unit
Ambient Temperature	Ta	25±2	°C
Ambient Humidity	Ha	50±10	%RH
Supply Voltage	According to typical value in "ELECTRICAL CHARACTERISTICS"		
Input Signal			
LED Light Bar Input Current Per Input			

5.2 OPTICAL SPECIFICATIONS

The relative measurement methods of optical characteristics are shown in 5.2. The following items should be measured under the test conditions described in 5.1 and stable environment shown in Note (5).

Item		Symbol	Condition	Min.	Typ.	Max.	Unit	Note
Color Chromaticity (CIE 1931)	Red	Rx	θ_x=0°, θ_Y =0° CS-2000 R=G=B=255 Gray scale	Typ – 0.03	0.650	Typ + 0.03	-	(1), (5)
		Ry			0.339			
	Green	Gx			0.324			
		Gy			0.613			
	Blue	Bx			0.157			
		By			0.049			
	White	Wx			0.313			
		Wy			0.329			
Center Luminance of White (Center of Screen)		L_C		320	400	-	cd/m^2	(4), (5)
Contrast Ratio		CR		700	1000	-	-	(2), (5)
Response Time		T_R	θ_x=0°, θ_Y =0°	---	8	---	ms	(3)
		T_F		---	7	---		
White Variation		W	θ_x=0°, θ_Y =0°	75	---	---	%	(5), (6)
Viewing Angle	Horizontal	x- + x+	CR ≧ 10	170	178	---	Deg.	(1), (5)
	Vertical	y- + y+		170	178	---		
Viewing Angle	Horizontal	x- + x+	CR ≧ 5	170	178	---	Deg.	(1), (5)
	Vertical	y- + y+		170	178	---		

Note (1) Definition of Viewing Angle (θx, θy):

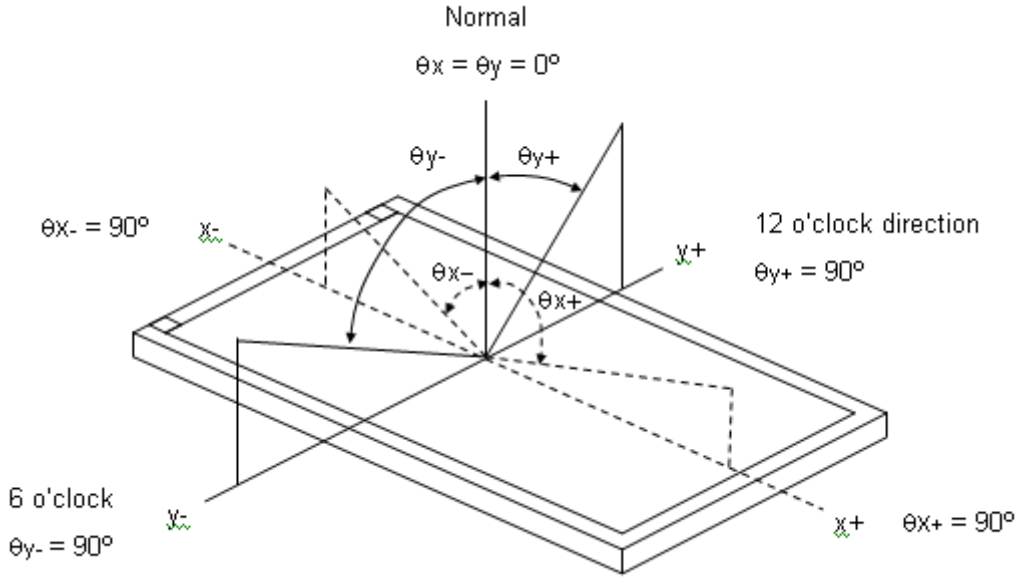

Note (2) Definition of Contrast Ratio (CR):

The contrast ratio can be calculated by the following expression.

Contrast Ratio (CR) = L255 / L0

L255: Luminance of gray level 255

L 0: Luminance of gray level 0

CR = CR (5)

CR (X) is corresponding to the Contrast Ratio of the point X at Figure in Note (6).

Note (3) Definition of Response Time (T_R, T_F):

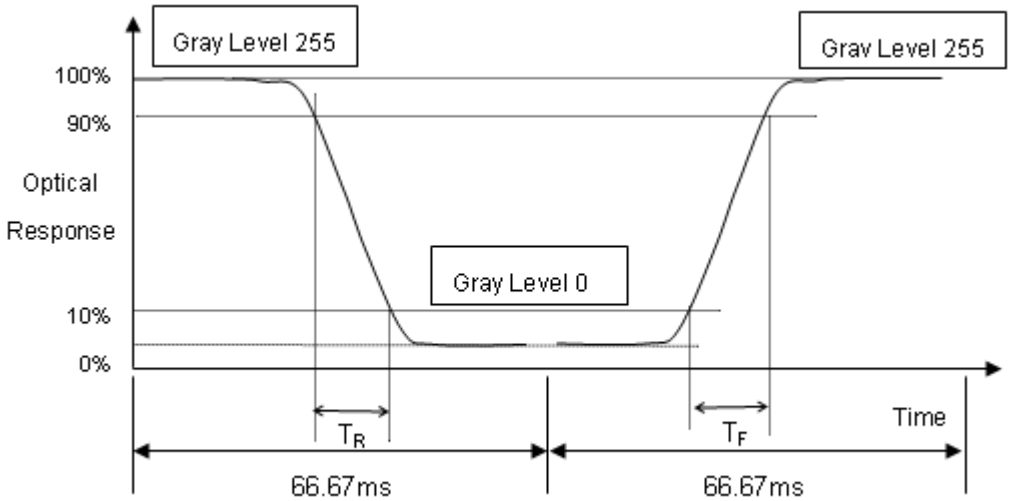

Note (4) Definition of Luminance of White (L_C):

Measure the luminance of gray level 255 at center point

L_C = L (5)

L (x) is corresponding to the luminance of the point X at Figure in Note (6).

Note (5) Measurement Setup:

The LCD module should be stabilized at given temperature for 40 minutes to avoid abrupt temperature change during measuring. In order to stabilize the luminance, the measurement should be executed after lighting Backlight for 40 minutes in a windless room.

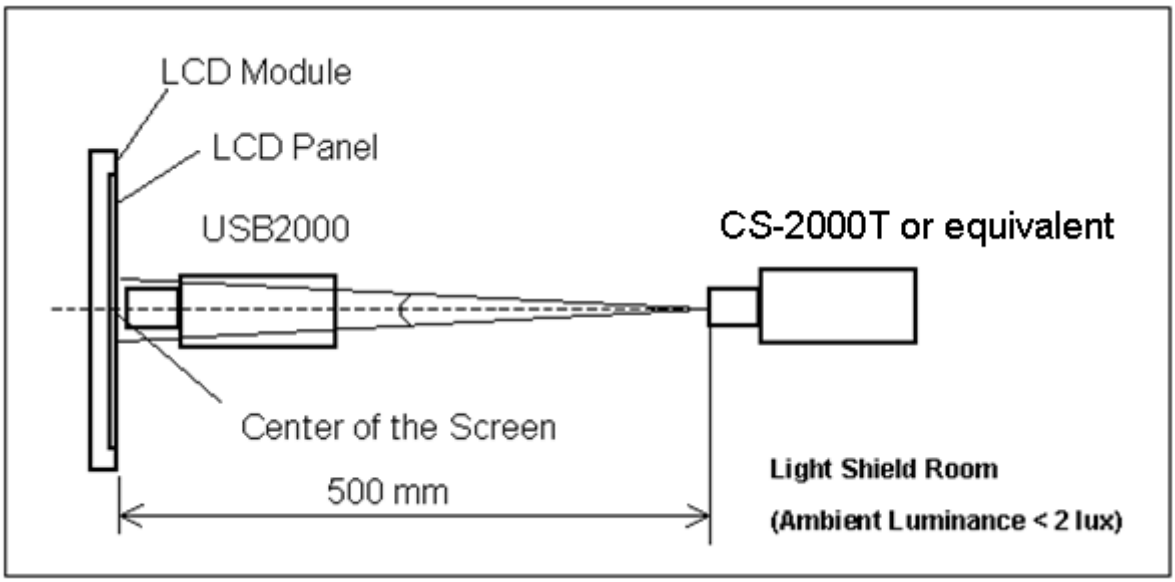

Note (6) Definition of White Variation (δW):

Measure the luminance of gray level 255 at 9 points

δW = (Minimum [L (1) ~ L (9)] / Maximum [L (1) ~ L (9)]) *100%

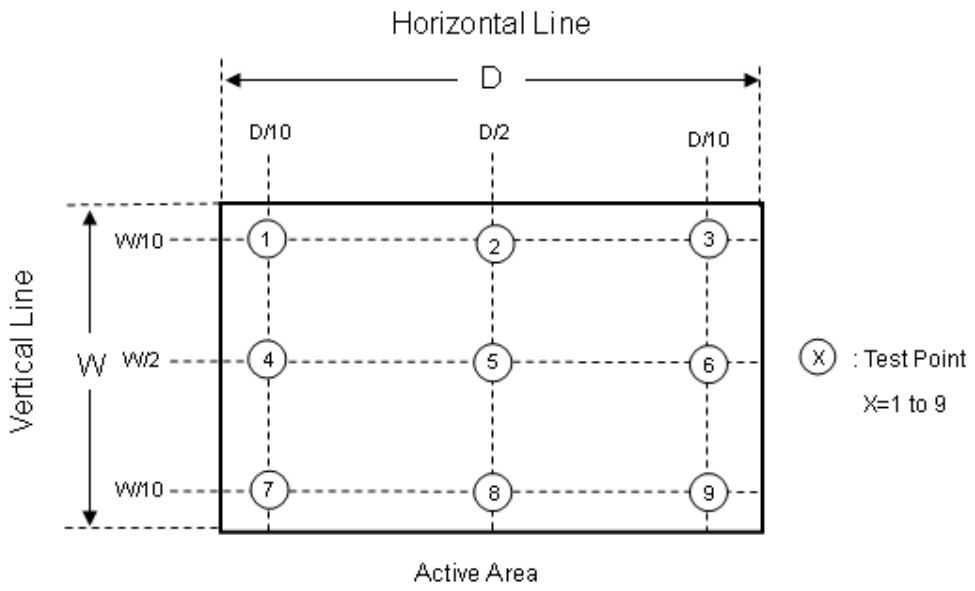

6. RELIABILITY TEST ITEM

Items	Required Condition	Note
Temperature Humidity Bias (THB)	Ta= 50℃ , 80%RH, 240hours	(1),(2), (3)
High Temperature Operation (HTO)	Ta= 60℃ , 240hours	
Low Temperature Operation (LTO)	Ta= 0℃ , 240hours	
High Temperature Storage (HTS)	Ta= 60℃ , 240hours	
Low Temperature Storage (LTS)	Ta= -20℃ , 240hours	
Vibration Test (Non-operation)	Acceleration: 1.5 G Wave: sine Frequency: 10 - 300 Hz Sweep: 30 Minutes each Axis (X, Y, Z)	
Shock Test (Non-operation)	Acceleration: 50 G Wave: Half-sine Active Time: 11 ms Direction : ± X, ± Y, ± Z.(one time for each Axis)	
Thermal Shock Test (TST)	-20℃/30min , 60℃ / 30min , 100 cycles	
On/Off Test	25℃ ,On/10sec , Off /10sec , 30,000 cycles	
ESD (Electro Static Discharge)	Contact Discharge: ± 8KV, 150pF(330Ω)	
	Air Discharge: ± 15KV, 150pF(330Ω)	
Altitude Test	Operation:10,000 ft / 24hours Non-Operation:30,000 ft / 24hours	

Note (1) There should be no condensation on the surface of panel during test.

Note (2) In the standard conditions, there is no function failure issue occurred. All the cosmetic Specification is judged before reliability test.

Note (3) Before cosmetic and function test, the product must have enough recovery time, at least 24 hours at room temperature.

7. PACKING

7.1 PACKING SPECIFICATIONS

(1) 10 LCD modules / 1 Box

(2) Box dimensions: 567(L) X 301(W) X 376(H) mm

(3) Weight: approximately: 21kg (10 modules per box)

7.2 PACKING METHOD

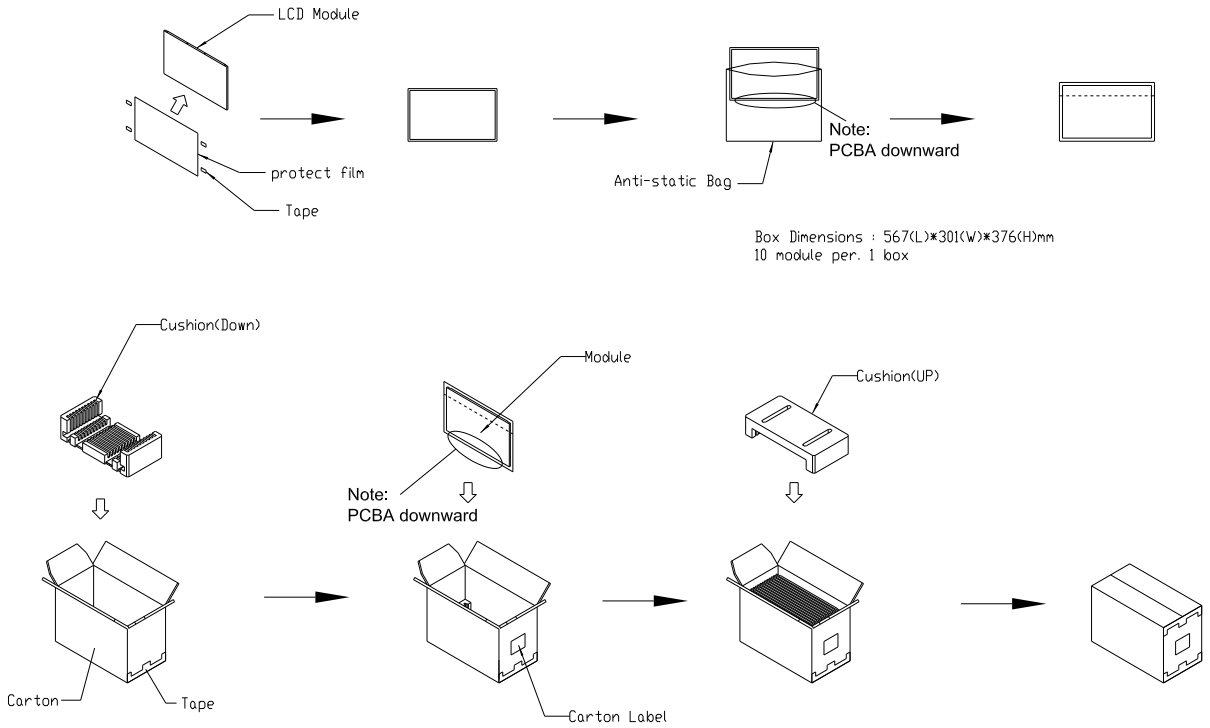

Figure. 8-1 Packing method

7.3 PALLET

Sea / Land Transportation
(40ft HQ Container)

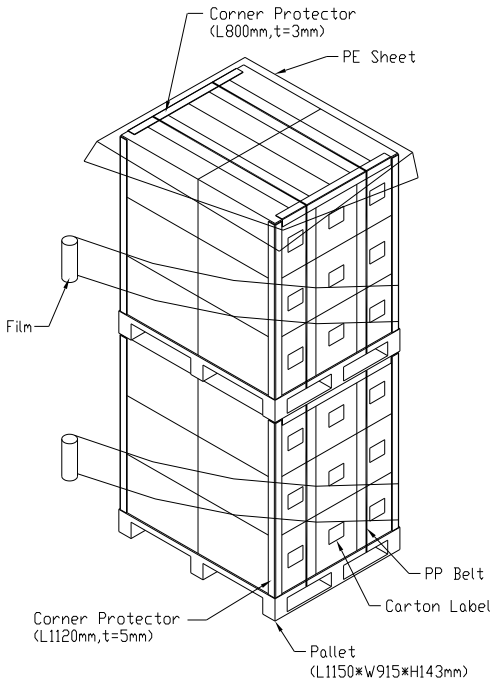

Sea / Land Transportation
(40ft Container)

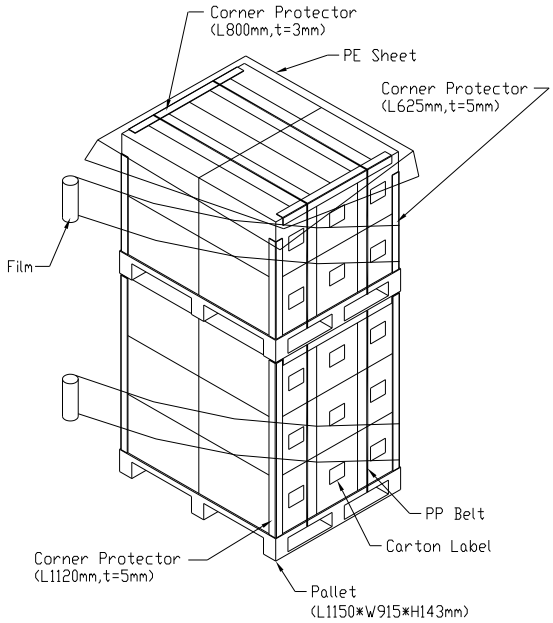

Air Transportation

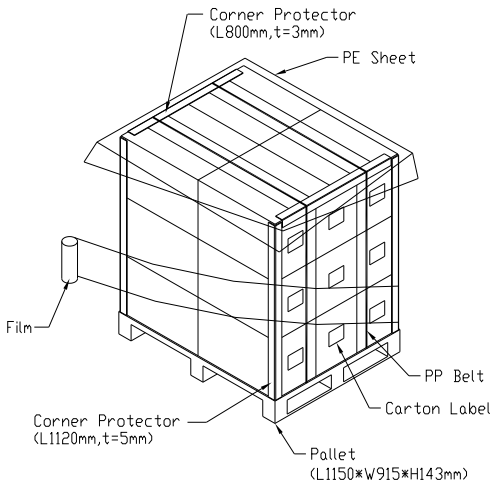

Figure. 8-2 Packing method

7.4 UN-PACKING METHOD

UN-packaging method is shown as following figures.

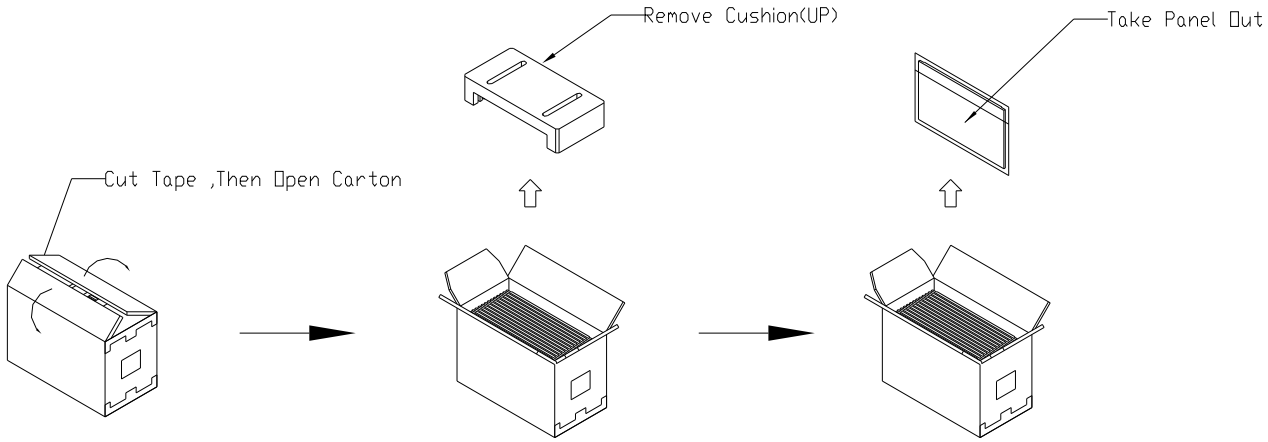

Figure. 8-3 Un-packing method

8. INX MODULE LABEL

The barcode nameplate is pasted on each module as illustration, and its definitions are as following explanation.

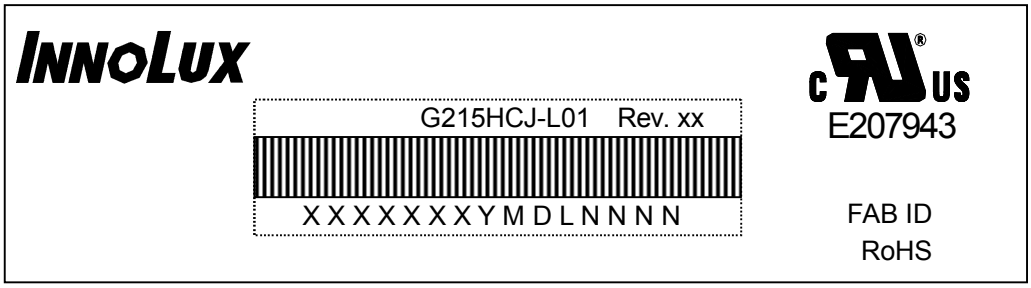

(a) Model Name: G215HCJ-L01

(b) Revision: Rev. XX, for example: A0, A1… B1, B2… or C1, C2…etc.

(c) Innolux barcode definition

Serial ID: XX-XX-X-XX-YMD-L-NNNN

Code	Meaning	Description
XX	Innolux internal use	-
XX	Revision	Cover all the change
X	Innolux internal use	-
XX	Innolux internal use	-
YMD	Year, month, day	Year: 0~9, 2001=1, 2002=2, 2003=3…2010=0, 2011=1, 2012=2… Month: 1~12=1, 2, 3, ~, 9, A, B, C Day: 1~31=1, 2, 3, ~, 9, A, B, C, ~, W, X, Y, exclude I, O, and U.
L	Product line #	Line 1=1, Line 2=2, Line 3=3, …
NNNN	Serial number	Manufacturing sequence of product

(e) FAB ID(UL Factory ID):

Region	Factory ID
TWCMI	GEMN
NBCMI	LEOO
NBCME	CANO
NHCMI	CAPG

9. PRECAUTIONS

9.1 ASSEMBLY AND HANDLING PRECAUTIONS

(1) Do not apply rough force such as bending or twisting to the module during assembly.

(2) To assemble or install module into user's system can be only in clean working areas. The dust and oil may cause electrical short or worsen the polarizer.

(3) It's not permitted to have pressure or impulse on the module because the LCD panel and Backlight will be damaged.

(4) Always follow the correct power sequence when LCD module is connecting and operating.

(5) Do not pull the I/F connector in or out while the module is operating.

(6) Do not disassemble the module.

(7) Use a soft dry cloth without chemicals for cleaning, because the surface of polarizer is very soft and easily scratched.

(8) It is dangerous that moisture come into or contacted the LCD module, because moisture may damage LCD module when it is operating.

(9) High temperature or humidity may reduce the performance of module. Please store LCD module within the specified storage conditions.

(10)When ambient temperature is lower than 10ºC may reduce the display quality. For example, the response time will become slowly.

9.2 STORAGE PRECAUTIONS

When storing for a long time, the following precautions are necessary.

(1) Store them in a dark place. Do not expose the module to sunlight or fluorescent light. Keep the Temperature between 5°C and 30°C at humidity 50+-10%RH

(2) The polarizer surface should not come in contact with any other object.

(3) It is recommended that they be stored in the container in which they were shipped.

(4) Storage condition is guaranteed under packing conditions.

(5) The phase transition of Liquid Crystal in the condition of the low or high storage temperature will be recovered when the LCD module returns to the normal condition

9.3 OPERATION PRECAUTIONS

(1) The LCD product should be operated under normal condition.

Normal condition is defined as below :

Temperature : 20±15℃

Humidity: 65±20%

Display pattern : continually changing pattern(Not stationary)

(2) If the product will be used in extreme conditions such as high temperature,high humidity,high altitude ,display pattern or operation time etc…It is strongly recommended to contact INX for application engineering advice . Otherwise , Its reliability and function may not be guaranteed.

(3) Operating usages to protect against image sticking due to long-term static display

(a) Suitable operating time: under 16 hours a day.

(b) Static information display recommended to use with moving image.

(c)Cycling display between 5 minutes' information(static) display and 10 seconds' moving image.

(4) Abnormal condition just means conditions except normal condition.

9.4 SAFETY PRECAUTIONS

(1) If the liquid crystal material leaks from the panel, it should be kept away from the eyes or mouth. In case of contact with hands, skin or clothes, it has to be washed away thoroughly with soap.

(2) After the module's end of life, it is not harmful in case of normal operation and storage.

9.5 SAFETY STANDARDS

The LCD module should be certified with safety regulations as follows:

(1) UL60950-1 or updated standard.

(2) IEC60950-1 or updated standard.

9.6 OTHER

(1) Normal operating condition

(a)Display pattern: dynamic pattern (Real display)

(Note) Long-term static display can cause image sticking.

(2) Operating usages to protect against image sticking due to long-term static display

(a) Suitable operating time: under 16 hours a day.

(b) Static information display recommended to use with moving image.

(c)Cycling display between 5 minutes' information(static) display and 10 seconds' moving image.

(3) Abnormal condition just means conditions except normal condition.

Appendix 1. SYSTEM COVER DESIGN NOTICE

1.	Set Chassis and MNT Module touching Mode
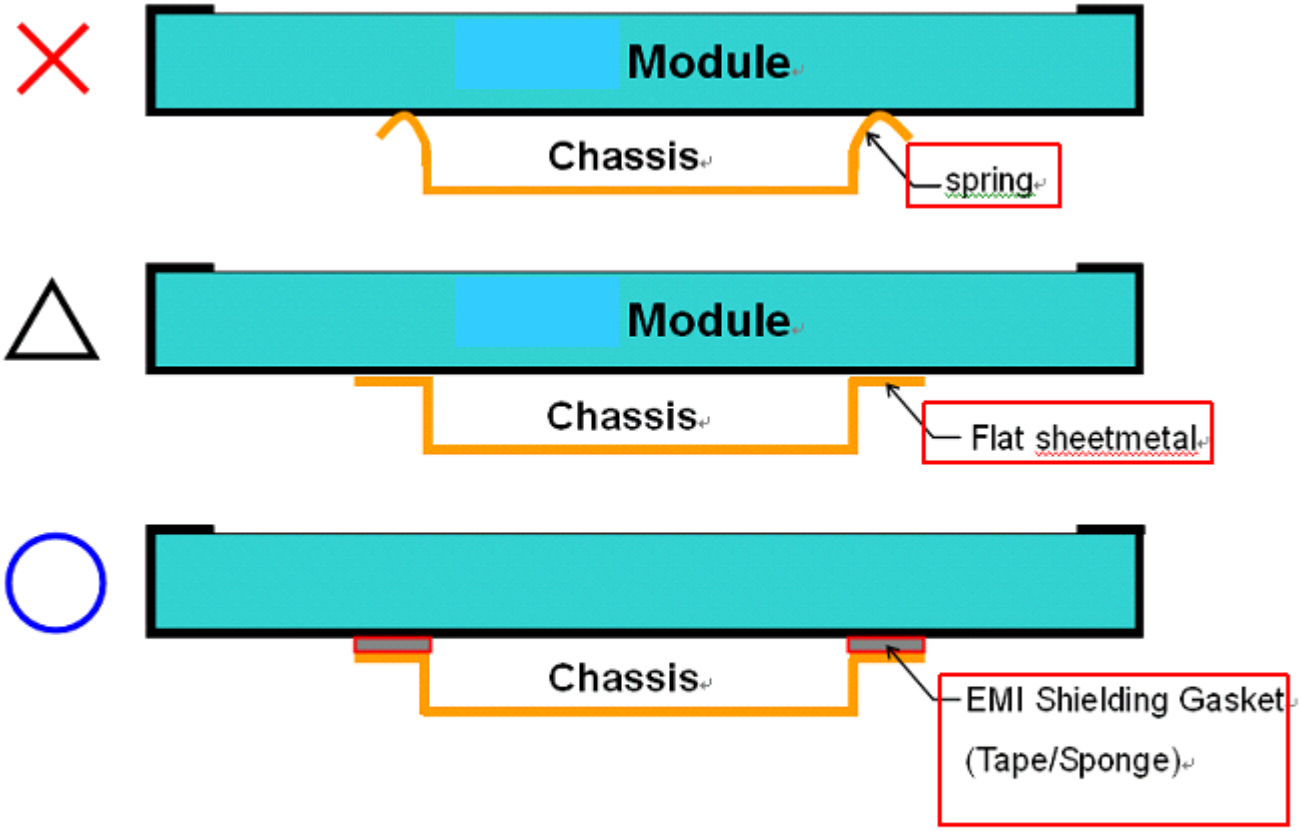	
Definition	a) To prevent from abnormal display & white spot after Mechanical test, it is not recommended to used spring type chassis. b) We suggest the contact mode between Chassis and Module rear cover is Tape/Sponge, second is Flat sheetmetal type chassis (Don't interference from flat sheetmetal of chassis to rear cover of Module).

2	Tape/sponge design on system inner surface
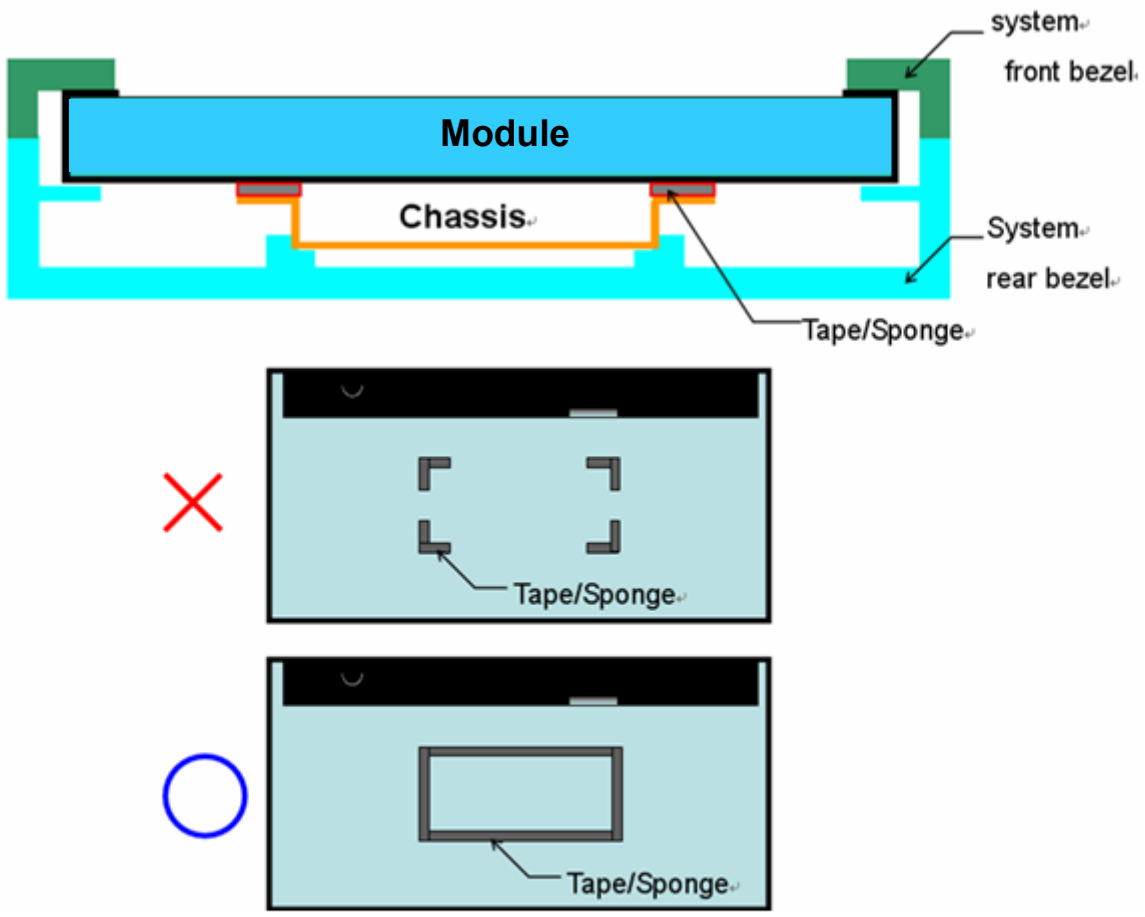	
Definition	a) To prevent from abnormal display & white spot after Mechanical test, We suggest using Tape/Sponge as medium between chassis and Module rear cover could reduce the occurrence of white spot. b) When using the Tape/Sponge, suggest it be lay over between set chassis and module rear cover. it is not recommended to add tape/sponge in separate location. Since each tape/sponge may act as pressure concentration location.

3	System inner surface examination
	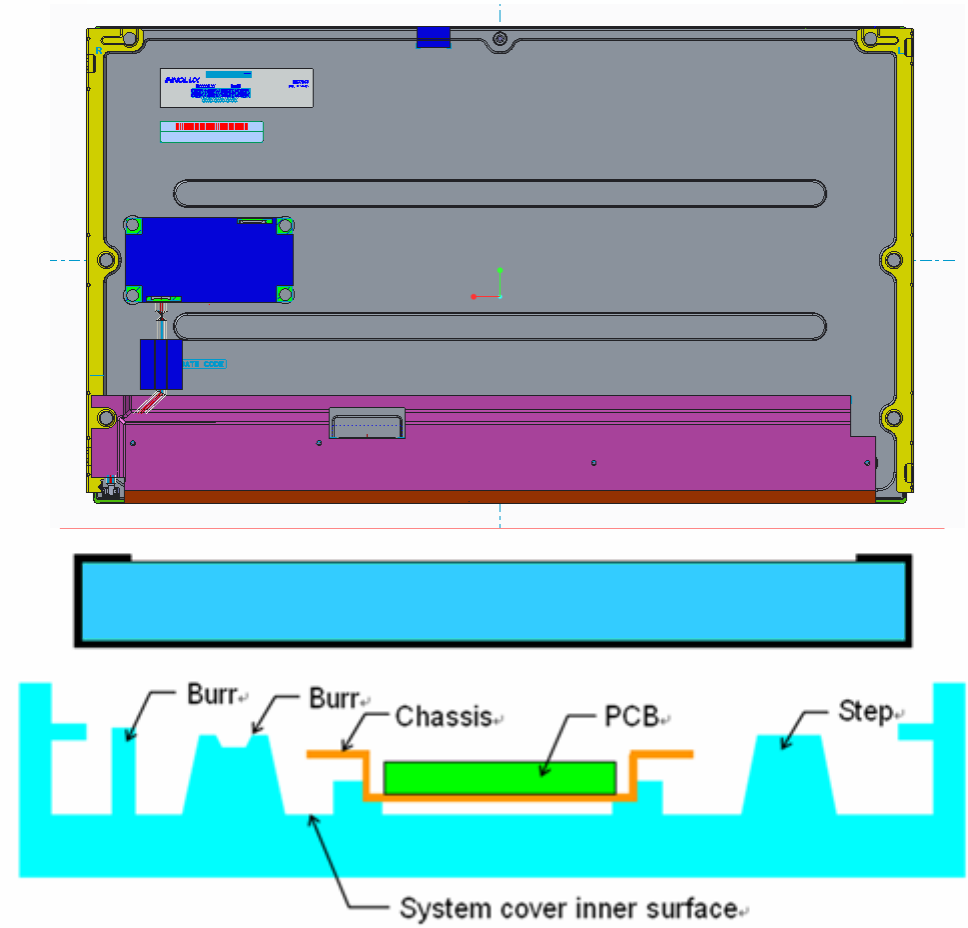
Definition	a). Burr at logo edge, step, protrusion or PCB board will easily cause white spot. b). Keeping flat surface underneath module is recommended. c). The area ( ) on Module PCBA and Light bar connector should keep at least 1mm gap to any structure with System cover inner surface.

4	The overlapping part on System's Chassis and electric wire needs gap structure.

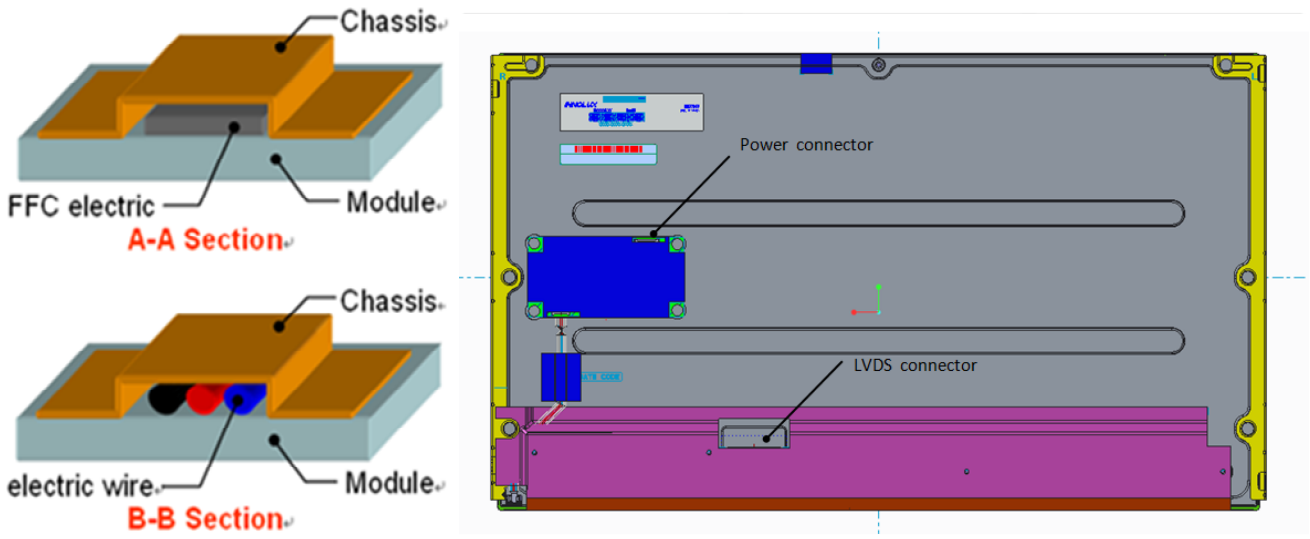

Definition	The overlapping part on System's Chassis and electric wire (FPC、FFC and wire) needs gap structure to avoid display of white spot by pressing overlapping part cause interference.

5	System cover's ventilation outlet structure

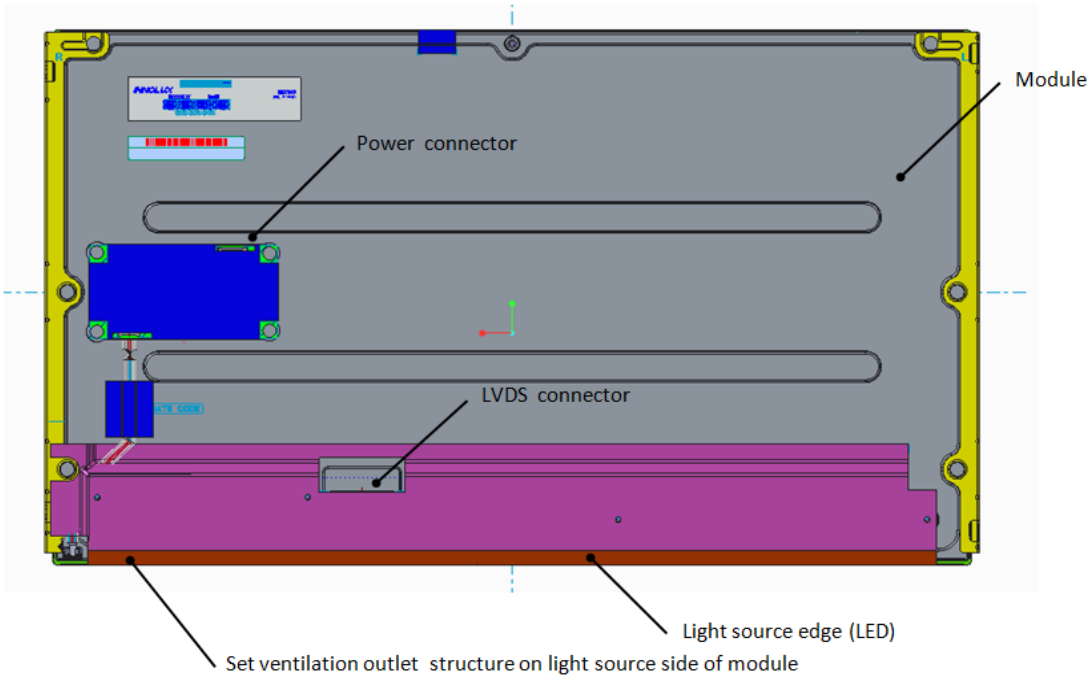

Definition	To prevent from abnormal display of light leakage, We suggest to set ventilation outlet structure on side of Module Light bar in system cover inner surface.

Appendix 2. OUTLINE DRAWING