EN

tcontrol

Ed.4.25

# TA3R

Pump alternator Triplex




**CHECK ALL CONNECTIONS BEFORE STARTING UP THE EQUIPMENT. ANY INCORRECT WIRING MAY POSE AN ELECTRICAL HAZARD**

**IMPORTANT: PUMPS LEADS, CONNECTIONS AND WIRES MUST BE WELL INSULATED, AS A FAULTY GROUND CONTACT CAN CAUSE MALFUNCTION.**

**GROUND CONNECTION (terminal block 7). To ensure that the level controller works as required is essential a correct ground connection.**

**Make the connection to any part of the piping or pump (screw, clamp, valve, etc.) to a ground screw or by means of a submerged probe installed at the bottom of the container if the well or tank are made of an insulating material (fi berglass or plastics in general).**

**Before starting, disconnect power and work with the right tools, THIS EQUIPMENT MUST BE INSTALLED BY A QUALIFIED PROFESSIONAL.**

**If the equipment is used or modified outside of what is specified by the manufacturer, safety may be compromised by exempting Toscano from any responsibility for improper use. The interior of the equipment should only be handled by our technical service.**

## Connection

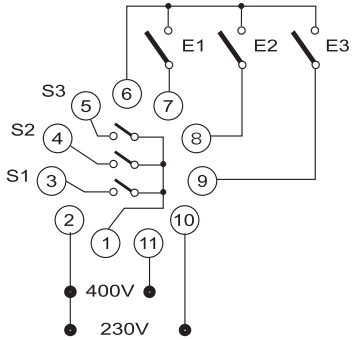


## Control module

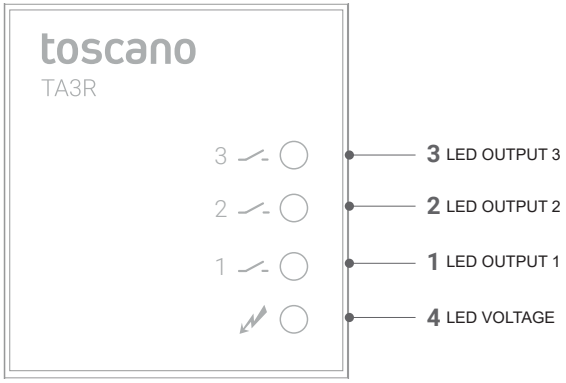


## Operation

Standar operation

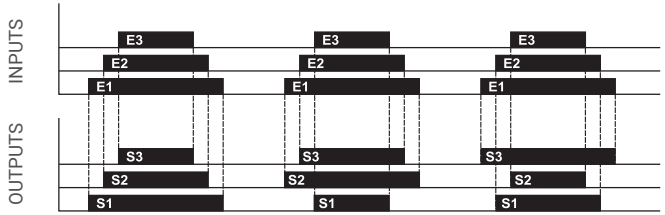


Operation in case of any input contact failure.

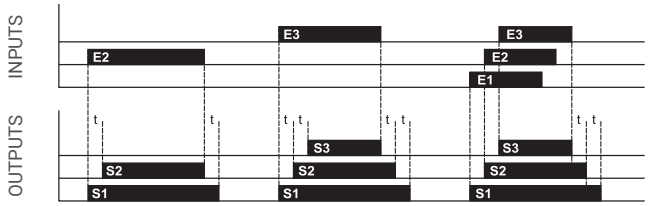


## Description

Relay of alternation of 3 pumps by means of pressure switches, 3 relays outputs, dual voltage 230/400VAC. Pluggable on undecal base. 3 controls inputs and 3 relays outputs.

## Especificaciones técnicas

| | |
|---|---|
| Signage | VOLTAGE, OUTPUT 1, OUTPUT 2 Y OUTPUT 3 |
| Supply voltage | 240/400 VAC |
| Frecuence | 50-60 Hz |
| Powur consumed | 2 VA |
| Allowable voltage variations | ±10% |
| Temperature range | -10 °C...+60°C |
| Input voltage(s) | 12 VDC |
| Maximum terminal cross-section | 2,5 $mm^2$ |
| Output | 5 A - 250 VAC<br>5 A - 30 VDC |
| Approx. average weight | 150 g (200g incl. base) |
| Dimensions (mm) | 81x36x51 |


**Toscano Línea Electrónica, S.L.**
P.I. La Isla c/Río Viejo, 50 - 41700 - Dos Hermanas - SEVILLA - SPAIN - (+34) 954 999 900 - www.toscano.es - info@toscano.es



Cod. 50023545


toscano