vigivolt

# COMBI-4PD

**Permanent overvoltage protector against mains voltage increases in three-phase installations. Curve D.**

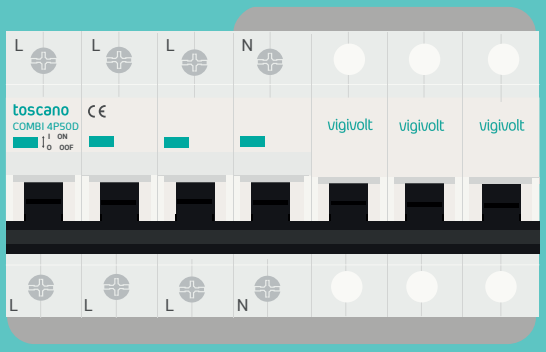


EN

USER MANUAL

Cod. 50023661. Ed. 2.26

| WARNING! | HAZARD OF ELECTRIC SHOCK, EXPLOSION, OR ARC FLASH |
|---|---|
| - The installation, maintenance and eventual replacement of this device must only be carried out by a qualified electrician.<br>- This device must not be repaired.<br>- All applicable local, regional and national regulations must be complied with during the installation, use, maintenance and replacement of this device.<br>- This device should not be installed if, when unpacking it, you observe that it is damaged.<br>- Toscano cannot be held responsible in the event of non-compliance with the instructions in this document and in the documents to which it refers.<br>- For the correct operation of the equipment, the phases must be connected to the "L" terminals and the neutral to the "N". | - Turn off all power supplying this device before working on it.<br>- Use a voltage tester on an appropriate scale to verify that all live conductors are not energized.<br>- Failure to comply with these instructions may result in serious injury or death. |

## Dimensions

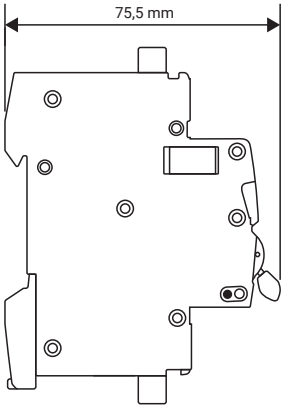


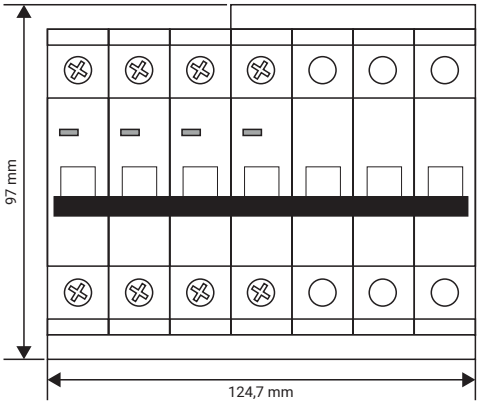


## Electrical diagrams

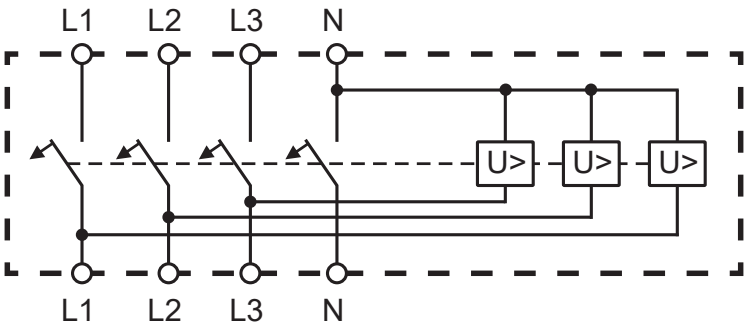

## Wiring

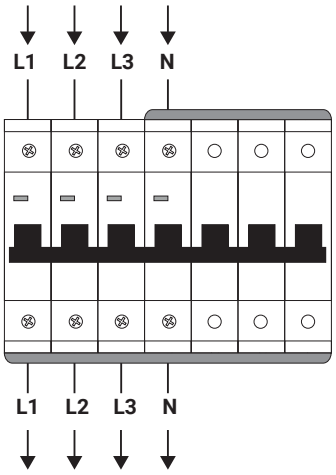


## Technical specifications

| | | |
|---|---|---|
| GENERAL | Rated operational voltage (L-N / L-L) | 240 VAC / 400 VAC |
| | Frequency | 50-60 Hz |
| | Maximum terminal cross-section | 25 $mm^2$ |
| | Tightening torque | 2.5 Nm |
| | Power consumption | 0.3 W |
| | Environmental limits | -20 °C +70 °C / 80% R.H. |
| | Protection | IP20 |
| | Mounting | Rail DIN 35 |
| | No. of DIN modules | 7 |
| | Dimensions (width x height x depth) | 125 x 97 x 70 mm |
| | Approx. average weight | 760 g |
| | Approx. packed weight | 805 g |
| PERM. | Disconnection voltage | according to EN IEC 63052 |
| | Overvoltage response time | |
| MCB | Rated current | 16 / 20 / 25 / 32 / 40 / 50 / 63 A (according to model) |
| | Tripping curve code | D |
| | Breaking capacity Icn | 10 kA |
| COMPLIANCE | Directives | 2014/35/UE (LVD)<br>2014/30/UE (EMC)<br>2011/65/UE (RoHS) |
| | Standards | EN IEC 63052<br>EN 60898-1<br>EN 61000-4-2/-3/-4/-5/-6/-8/-11/-12<br>EN IEC 61000-6-1/-2/-3/-4 |

## Description

Protection device against permanent overvoltages caused by increases in the mains voltage, in single-phase or two-phase installations. Consists of MCB + trip coil.

## Operation

When any of the trip coils is subjected to a voltage higher than that established in the standard, it causes the MCB contacts to open, leaving all circuits downstream of the VIGIVOLT COMBI protector de-energized.

When the device is powered on, the LED remains continuously lit for 5 seconds, indicating that the system is starting and performing an internal self-check.

Under normal operating conditions, the device indicates its **correct status (OK)** with a **green flash every second** on the front LED. If **an overvoltage** is detected, the device signals it visually with **a red flash,** warning of the abnormal condition.

**To identify the device version**, observe the number of consecutive LED flashes after power-on. Each flash sequence corresponds to a specific firmware or model version, allowing for quick visual identification of the device.

Cod. 50023661. Ed. 2.26

Scan for more information:

toscano

**Toscano Línea Electrónica, S.L.**
P.I. La Isla c/Río Viejo, 50 - 41700 - Dos Hermanas - SEVILLA - SPAIN - (+34) 954 999 900 - www.toscano.es - info@toscano.es