vigivolt

PT2 FRANKLIN

Franklin tip in stainless steel + adapter piece.

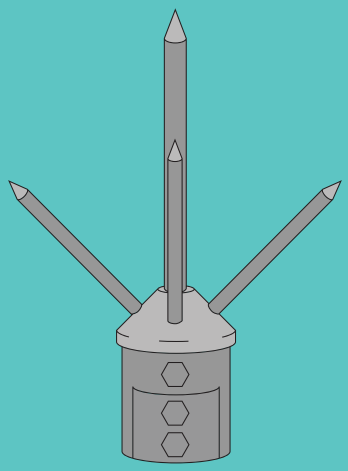

EN

USER MANUAL

Cod. 50023828. Ed.1.26

WARNING!	HAZARD OF ELECTRIC SHOCK, EXPLOSION, OR ARC FLASH
- The installation, maintenance and eventual replacement must only be carried out by a qualified electrician. - This device must not be repaired. - All applicable local, regional and national regulations must be complied with during the installation, use, maintenance and replacement of this device. - This device should not be installed if, when unpacking it, you observe that is damaged. - Toscano cannot be held responsable in the event of non-compliance with the instructions in this document and in the documents to wich refers.	- Turn off all power supplying this device before working on it. - Failure to comply with these instructions may result in serious injury or even death.

Dimensions

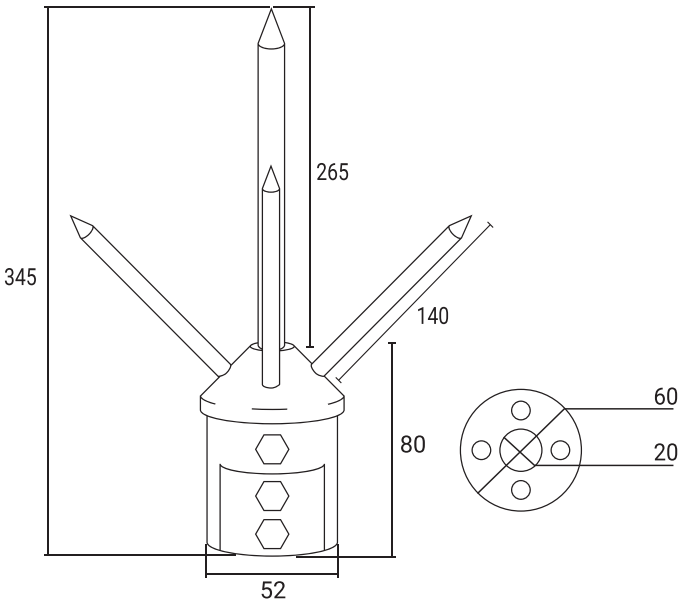

Description

Multiple Franklin air terminal with mast adapter. Central and multiple tip made of AISI 316 stainless steel and adapter body made of stainless steel, with stainless steel screws.

External lightning protection, suitable for all types of structures, either as a single capture system or as a multiple system in Faraday cages or conductive mesh systems.

Protection volume

The installation design shall be carried out so that the building remains within the protected volume determined by one of the following methods, which may be used separately or in combination, according to CTE SU8, "Protection against the risk caused by lightning action".

- Protection angle.
- Rolling sphere.
- Protection mesh or grid.

Technical specifications

GENERALS	Material	Stainless steel
	Weight	1,4 kg
	Standards	UNE EN 62.305-3 UNE-EN IEC 62561-2 CTE SU8 (Protection against the risk caused by lightning action)

Check the standards that our products comply with and download their declaration of conformity at:
toscano.es/standards

toscano

Toscano Línea Electrónica, S.L.
P.I. La Isla c/Río Viejo, 50 - 41700 - Dos Hermanas - SEVILLA - SPAIN - (+34) 954 999 900 - www.toscano.es - info@toscano.es