vigivolt

PT2-PIE-SOPORTE

Support base for PT-MASTIL-6M. Fixing by means of double anchors.

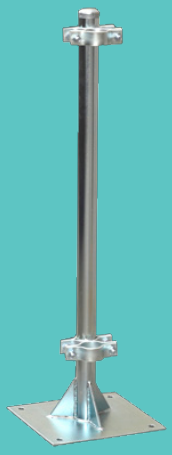

EN

USER MANUAL

Cod. 50023845. Ed.1.26

WARNING!	HAZARD OF ELECTRIC SHOCK, EXPLOSION, OR ARC FLASH
- The installation, maintenance and eventual replacement must only be carried out by a qualified electrician. - This device must not be repaired. - All applicable local, regional and national regulations must be complied with during the installation, use, maintenance and replacement of this device. - This device should not be installed if, when unpacking it, you observe that is damaged. - Toscano cannot be held responsable in the event of non-compliance with the instructions in this document and in the documents to wich refers.	- Turn off all power supplying this device before working on it. - Failure to comply with these instructions may result in serious injury or even death.

Dimensions

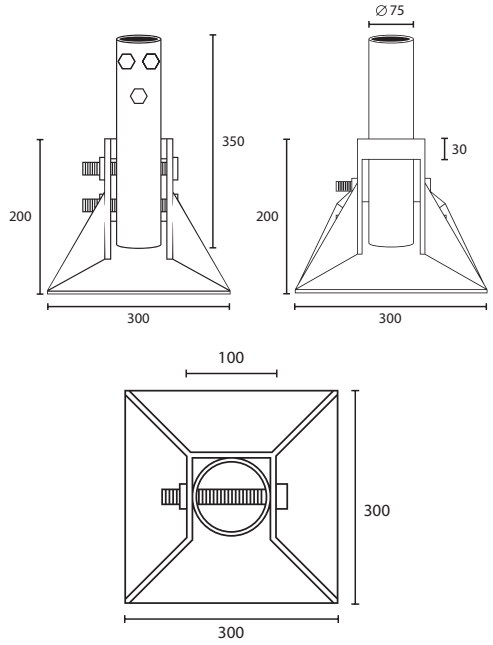

Description

Fijación de mástiles de diámetros comprendidos entre Ø1'1/4" a 2", y de hasta 6m de altura.

Fijación de la placa base del anclaje a superficie plana mediante la colocación de espárrago M12 o taco metálico. Fijación del mástil al soporte placa base, mediante dos abrazaderas dobles. Fabricados en acero galvanizado en caliente y sobre pedido en acero inoxidable AISI 316. Para un montaje más cómodo, el pie puede vascular hacia un lado tal como se indica en el esquema:

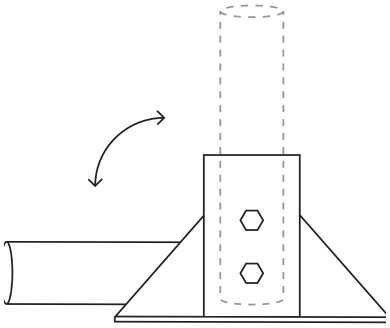

Technical specifications

GENERALS	Material	Galvanized steel
	Dimensions	400 x 300 x 300 mm
	Weight	14 kg
	Standards	UNE 21.186:2011 NFC 17.102:2011 UNE-EN 50.164 UNE-EN 62.305

Check the standards that our products comply with and download their declaration of conformity at:
toscano.es/standards

toscano

Toscano Línea Electrónica, S.L.
P.I. La Isla c/Río Viejo, 50 - 41700 - Dos Hermanas - SEVILLA - SPAIN - (+34) 954 999 900 - www.toscano.es - info@toscano.es