vigivolt

PT2-PLACA

Copper earth plate.

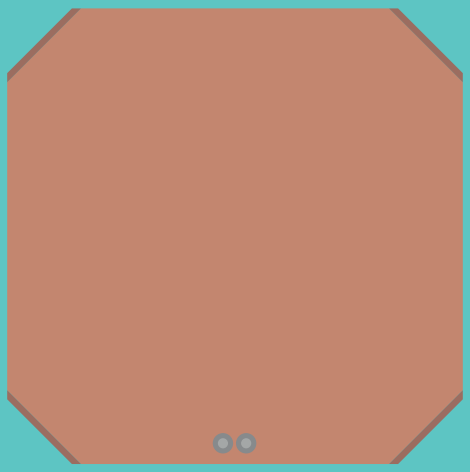

EN

USER MANUAL

Cod. 50023860. Ed.1.26

WARNING!	HAZARD OF ELECTRIC SHOCK, EXPLOSION, OR ARC FLASH
- The installation, maintenance and eventual replacement must only be carried out by a qualified electrician. - This device must not be repaired. - All applicable local, regional and national regulations must be complied with during the installation, use, maintenance and replacement of this device. - This device should not be installed if, when unpacking it, you observe that is damaged. - Toscano cannot be held responsable in the event of non-compliance with the instructions in this document and in the documents to wich refers.	- Turn off all power supplying this device before working on it. - Failure to comply with these instructions may result in serious injury or even death.

Dimensions

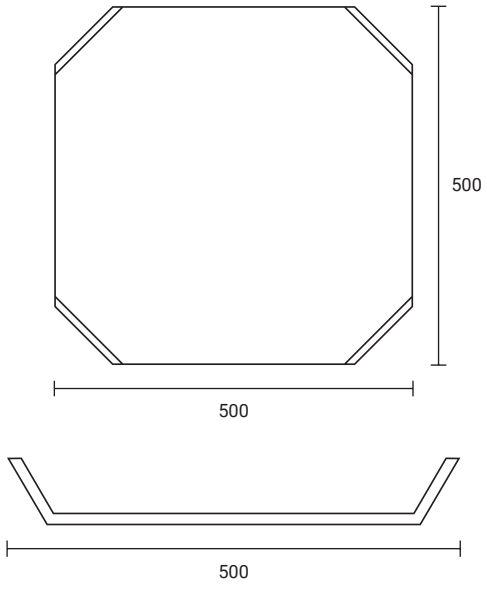

Description

Plate with a carbon steel core coated with electrolytically deposited copper, providing strong adhesion between both metals.

The copper layer has a minimum thickness of 70 microns. Connection by means of a clamp and stainless steel hardware in accordance with UNE 202006.

Technical specifications

GENERALS	Dimensions	500 x 500 mm
	Material	Copper
	Standards	UNE 21.186 Lightning Protection. UNE-EN 124 according to the model.

Check the standards that our products comply with and download their declaration of conformity at:
toscano.es/standards

toscano

Toscano Línea Electrónica, S.L.
P.I. La Isla c/Río Viejo, 50 - 41700 - Dos Hermanas - SEVILLA - SPAIN - (+34) 954 999 900 - www.toscano.es - info@toscano.es