vigivolt

V2T-15B

Module for protection against transient overvoltages.
Type 2.
For two-phase lines, no neutral.



EN

USER MANUAL

Cod. 50021023. Ed. 1.26

WARNING!	HAZARD OF ELECTRIC SHOCK, EXPLOSION, OR ARC FLASH
- The installation, maintenance and eventual replacement of this device must only be carried out by a qualified electrician. - This device must not be repaired. - All applicable local, regional and national regulations must be complied with during the installation, use, maintenance and replacement of this device. - This device should not be installed if, when unpacking it, you observe that it is damaged. - Toscano cannot be held responsible in the event of non-compliance with the instructions in this document and in the documents to which it refers. - For the correct operation of the equipment, the phases must be connected to the "L" terminals and the earth to the "PE" terminal.	- Turn off all power supplying this device before working on it. - Use a voltage tester on an appropriate scale to verify that all live conductors are not energized. - Failure to comply with these instructions may result in serious injury or death.

Dimensions

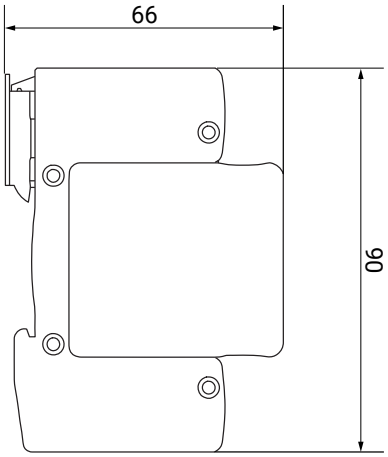

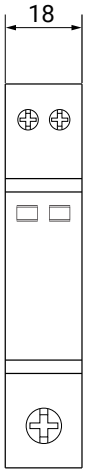

Electrical diagrams

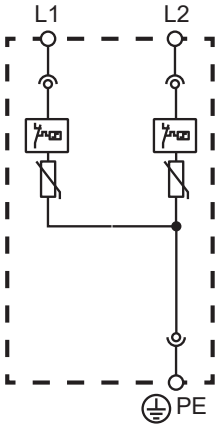

Wiring

Do not install on lines without earth (PE).

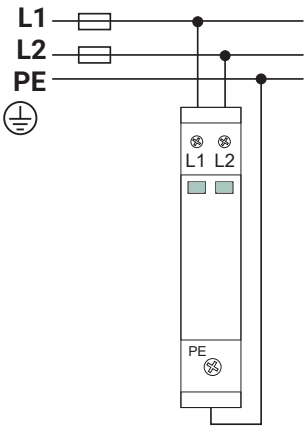

Technical specifications

GENERAL	Rated voltage Un (L-L)	230 VAC
	Maximum voltage Uc (L-L)	320 VAC
	Frequency	50-60 Hz
	Maximum terminal cross-section	16 mm^2 (L) / 25 mm^2 (PE)
	Tightening torque	2.5 Nm
	Upstream protective fuse	63 A gG
	Environmental limits	-40 ºC +80 ºC / 95% R.H.
	Degree of protection	IP20
	Mounting	Rail DIN 35
	No. of DIN modules	1
	Dimensions (width x height x depth)	18 x 90 x 66 mm
	Approx. average weight	105 g
	Approx. packed weight	120 g

OVERVOLTAGE	Protection level Up	≤1.5 kV
	Maximum discharge current (8/20µs) Imax (L-L / L-PE)	15 kA
	Rated discharge current (8/20µs) In (L-L / L-PE)	8 kA
	Overvoltage response time	≤25 ns
	Type	2

COMPLIANCE	Directives	2014/35/UE (LVD) 2014/30/UE (EMC) 2011/65/UE (RoHS)
	Standards	IEC / EN 61643-11

Description

Transient overvoltage protection module against overvoltages caused by atmospheric discharges, switching operations in electrical circuits and electrostatic discharges. Prevents damage that these transient overvoltages may cause to equipment powered from the mains. This device does not protect against permanent voltage rises.

Operation

In the event of a transient overvoltage, the device limits it by diverting it to PE, thus preventing any damage to devices connected to the mains.

If due to an overvoltage the protection becomes inoperative, the device will display the warning window in red. In that case, the protection module will have become unusable and must be replaced with another one (plug-in: easy replacement).

Cod. 50024023. Ed. 1.26

Scan for more information:

toscano
Toscano Línea Electrónica, S.L.
P.I. La Isla c/Río Viejo, 50 - 41700 - Dos Hermanas - SEVILLA - SPAIN - (+34) 954 999 900 - www.toscano.es - info@toscano.es