VIGILEC MONO V1M
Quick guide



1 Mains connection

Single-phase power supply (L/N, 230V)

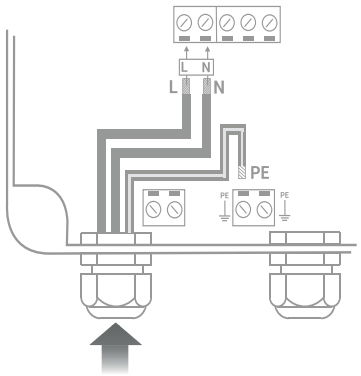

2 Motor connection

Single-phase pump with built-in capacitor

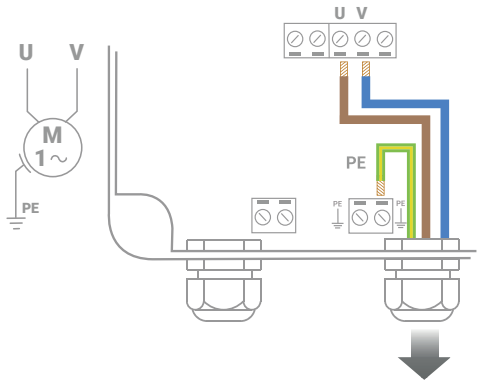

Single-phase pump with external capacitor

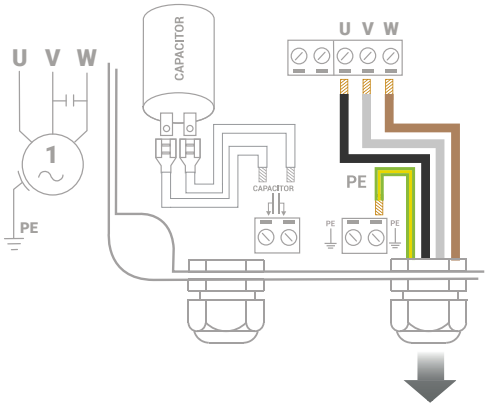

VIGILEC MINI V1N / V1N-F
Quick guide

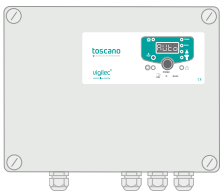

1 Mains connection

Voltage selection



Use the bridge to select the required supply voltage

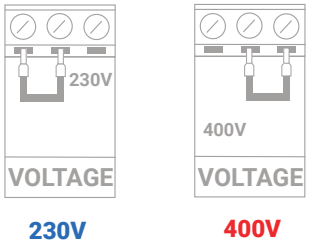

230V 400V

Single-phase power supply (L/N, 230V)

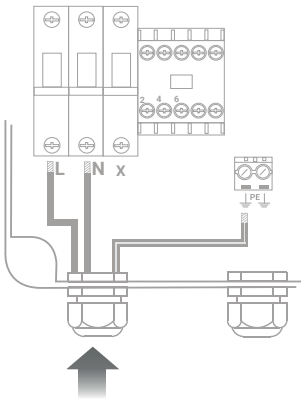

Three-phase power supply (L1/L2/L3, 400V)

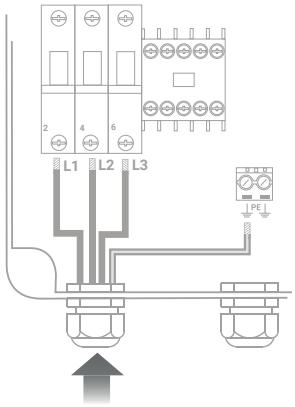

2 Motor connection

Three-phase pump

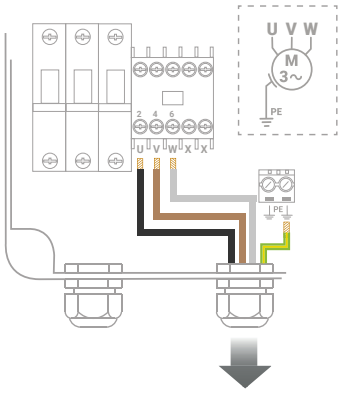

Single-phase pump with built-in capacitor

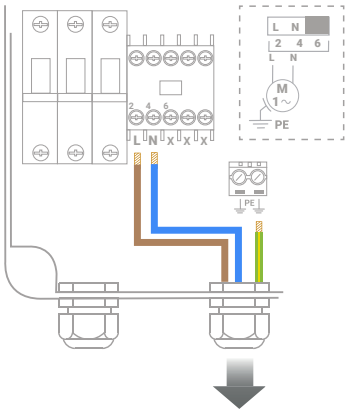

Single-phase pump with external capacitor

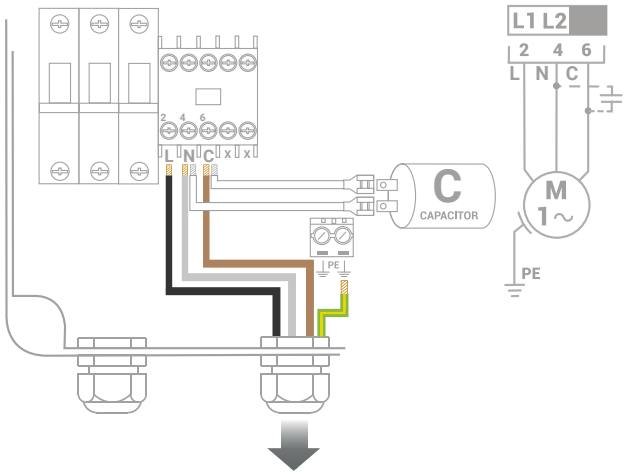

Control and protection wiring

V1M

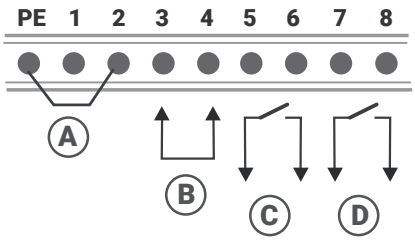

V1N / V1N-F

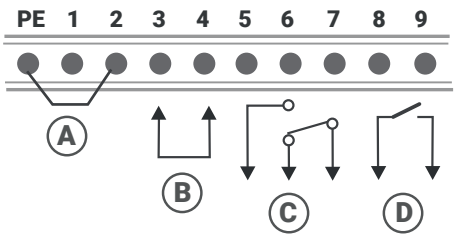

A- LOW LEVEL PROTECTION WITHOUT PROBES (**MOTOR UNDERLOAD**).

B- EXT ON/OFF (**ON/OFF CONTACT**) : E.G. APPLICATIONS: TANK PRESSURE SWITCH, TANK FILLING FLOAT SWITCH, TIMER, 24V IRRIGATION PROGRAMMER, 230V PRESSCONTROL, ETC **(DRY CONTACT OR VOLTAGE 6...250 V AC/DC).**

C- PUMP ALARM OUTPUT **(RELAY OUTPUT 5 A / 250 V AC).**

D- LOW LEVEL OUTPUT **(RELAY OUTPUT 5 A / 250 V AC).**

Select OFF / Auto Mode

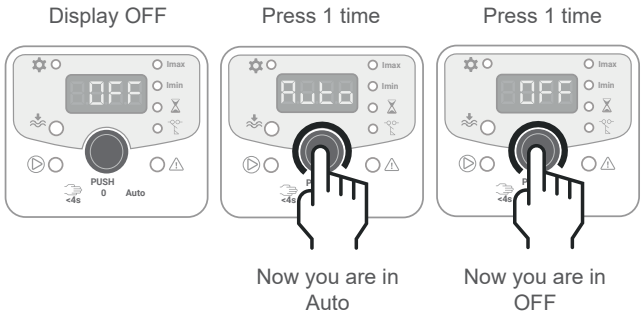

Manual start of the pump (Manual mode)

Press and hold to force the pump to run.

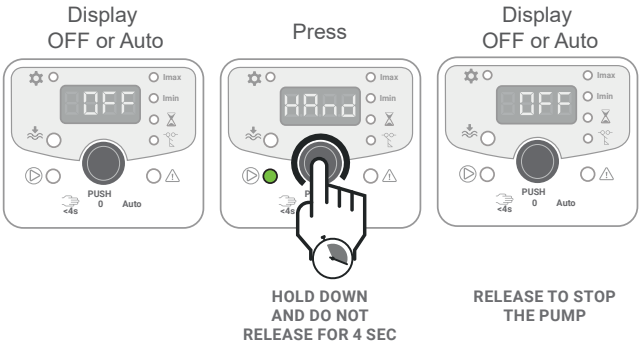

Restart of automatic setting of thermal protection (Imax / Imin)

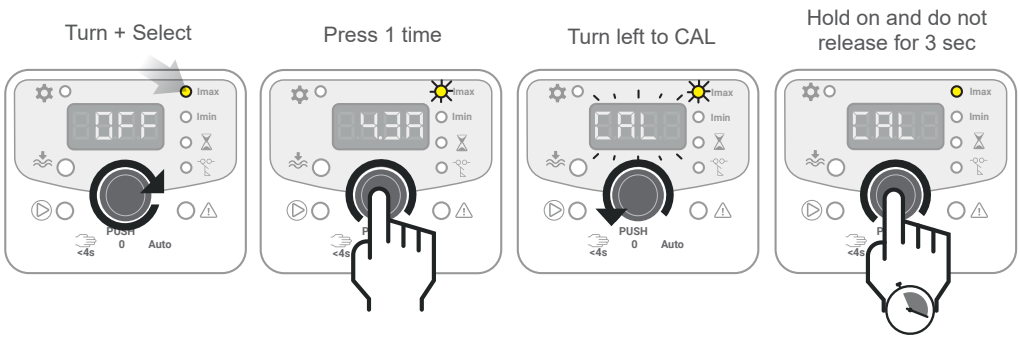

Note: The equipment automatically sets the motor overload / underload protections the first time it is switched on (>1 minute).

It sets the Imax value **15% above the maximum** recorded current and the Imin value **25% below the minimum** recorded current.

Alarm reset

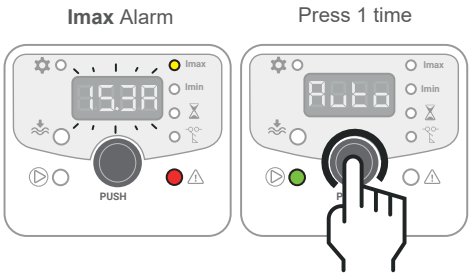

Alarm messages

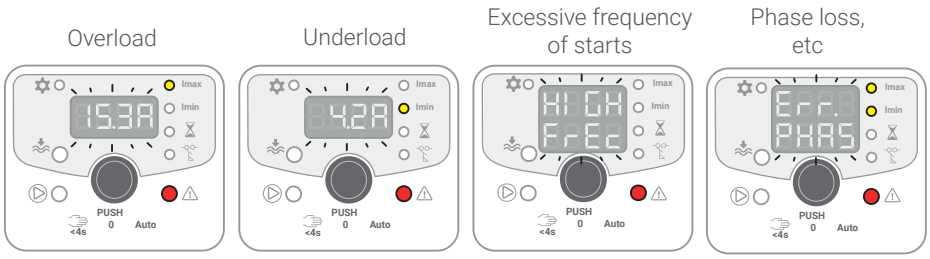

Manual setting of Imax, Imin, restart time and inhibition time (only flow switch)

Imax

CAL - 0,6 ... 21,0 A (V1M)
CAL - 0,6 ... 20,0 A (V1N)
CAL - 0,6 ... 29,0 A (V1N-F)

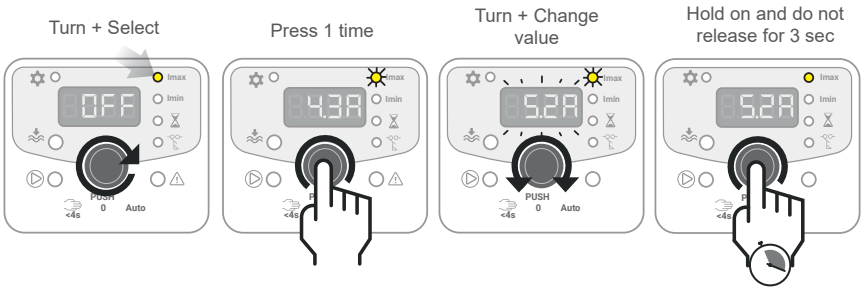

Imin

CAL - 0,5 ... 20,8 A (V1M)
CAL - 0,5 ... 19,8 A (V1N)
CAL - 0,5 ... 28,8 A (V1N-F)

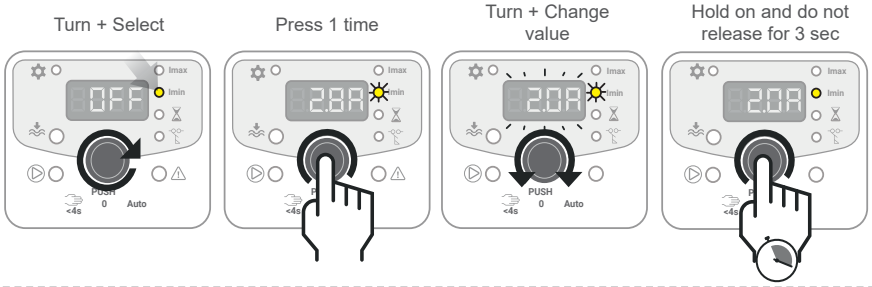

Restart time

OFF - 3' ...99H - HAnd

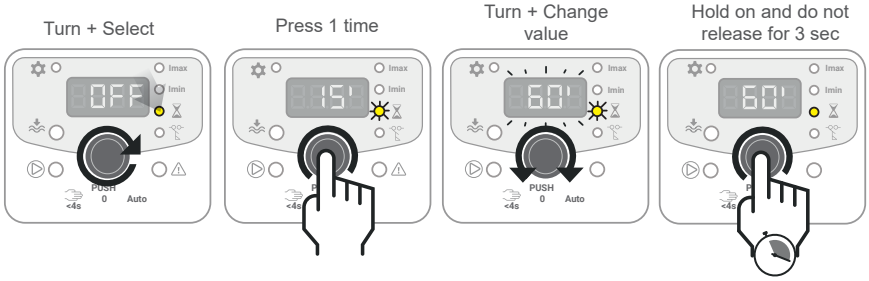

Flow switch Inhibition time

OFF - 5" ... 200"

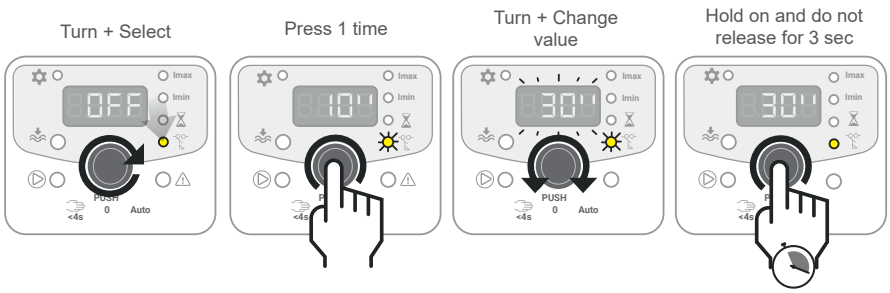

Reset to factory settings

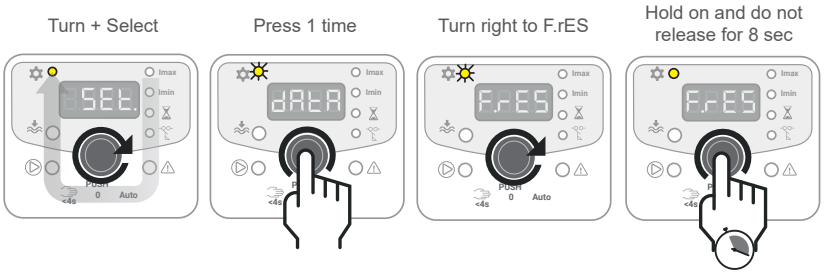

Note: The counters of running hours, number of starts, number of alarms and current of the last alarm will not be deleted.

Datalogger

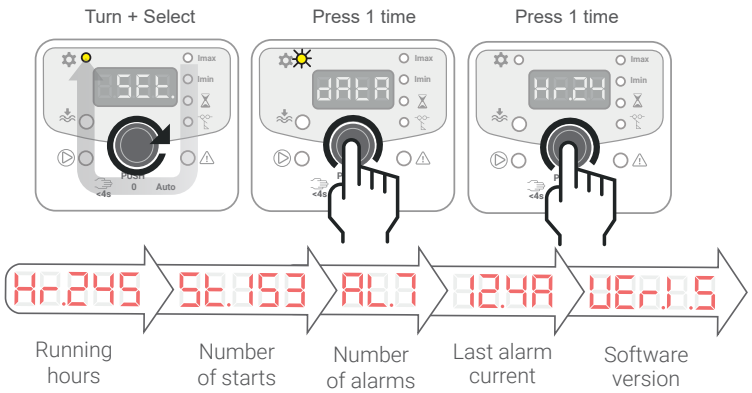

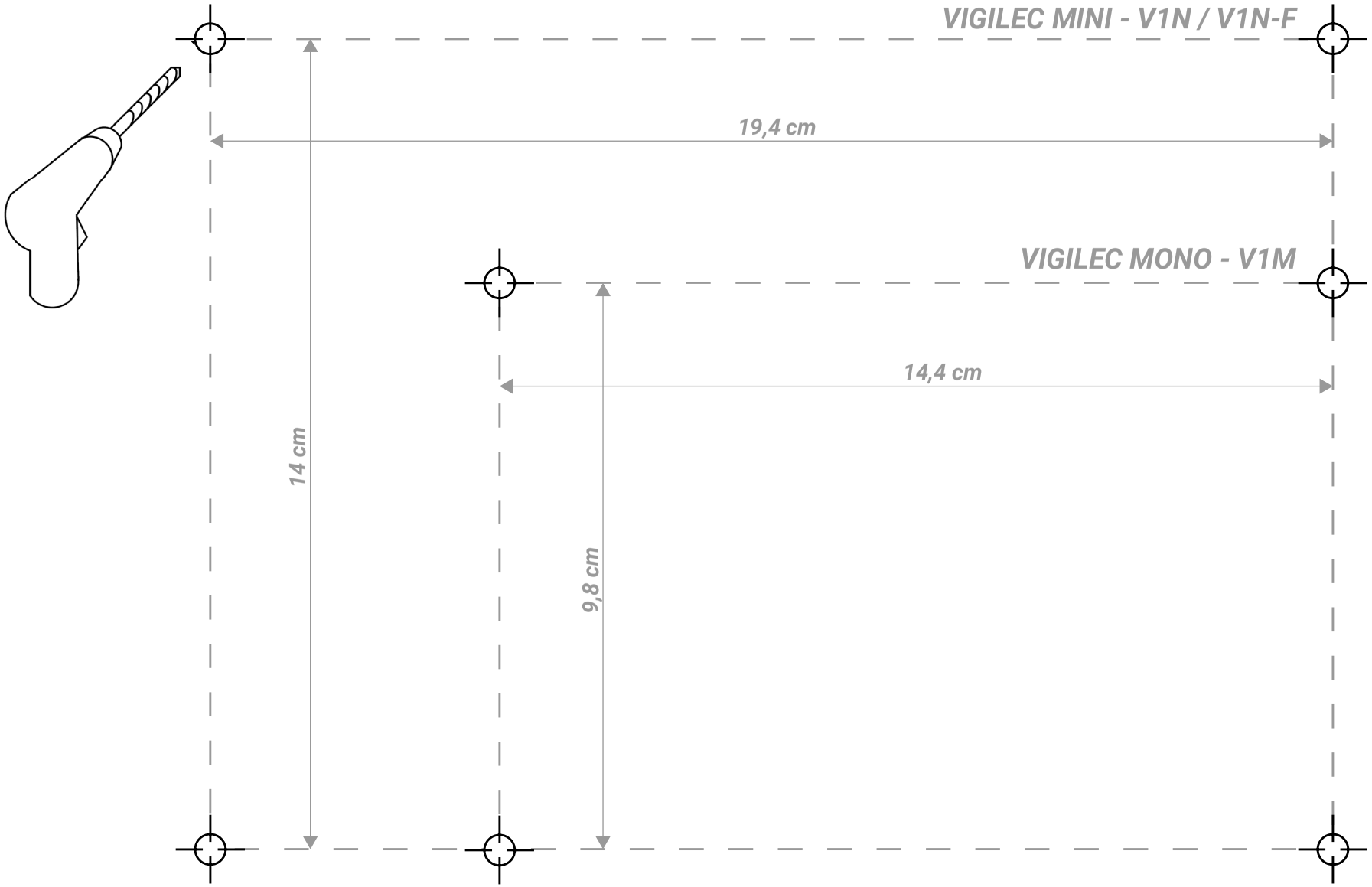

toscano

Toscano Línea Electrónica, S.L.

P.I. La Isla c/Río Viejo, 50 - 41700 - Dos Hermanas - SEVILLA - SPAIN - (+34) 954 999 900 - www.toscano.es - info@toscano.es