V2P/V2T Vigilec doble

INSTALLATION AND OPERATION

toscano

PRESSURE SWITCHESS control

V2P

PRESSURE SENSOR inside

V2T





Pump controlller and protection for two (3ph/1ph) pumps

(V2P: control by pressure switches/ V2T: control by pressure transducer)

General Description

- Control and protection unit made for two pumps with automatic alternation, operated by two pressure switches (V2P) or by a built-in pressure transducer (V2T).
- Three-phase and single-phase. Dual voltage supply: 230 / 400 VAC.
- Automatic pump alternation in case of failure or deactivation of one of them.
- Electronic overload protection relays, adjustable from 0 to 13 A.
- Air-break detection in booster tanks (selectable).
- Phase failure protection.
- Mains power switch.
- Power contactor.
- MAN-0-AUTO selection by push button (for each pump).
- Pilot lights for VOLTAGE, ON / OFF, LOW LEVEL and OVERLOAD.
- Alarm reset push button.
- Dry running protection by level probes controller or float.
- Remote control by contact or voltage from 6 to 400 VAC / VDC.
- Pump and air-break alarm contact outputs.
- All the control elements at 12 VDC, and isolated for a higher safety.
- High protection cable gland.
- Magnetic circuit breaker (MCB) Power Protection.

Installation

Mounted on a wall.

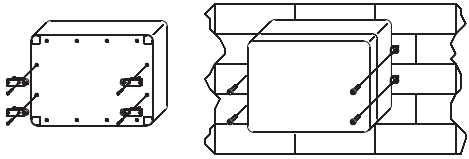

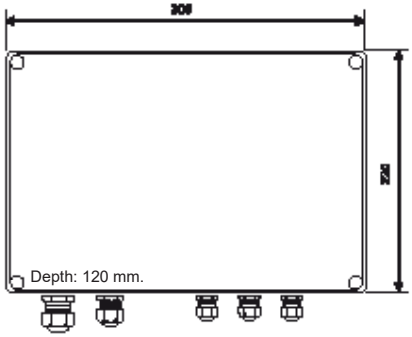

Clevis mounting in detail

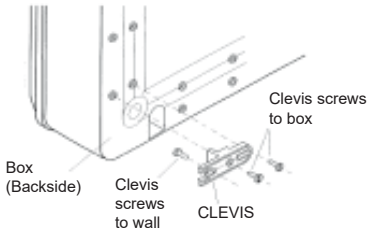

Front configuration

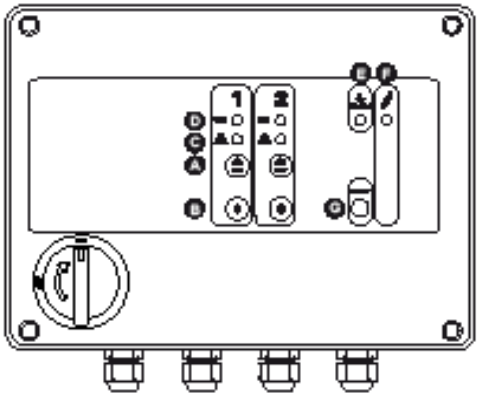

a **ON/OFF** push button:

AUTOMATIC mode (fixed green circle light): Push this button to get the unit working automatically, according to established controls and protections.

MANUAL mode (flashing green circle light): Press this button for at least 4 seconds to force the pump running, remaining the pump temperature protection only. Release the button to get back to automatic mode.

B **STOP** button. Stops the motor and doesn't allow starting it under any circumstances. If there is a voltage failure, the selected position (STOP or AUTO) remains in memory, continuing the selected mode once voltage is restored.

C **MOTOR ALARM**. Red pilot light.

D **MOTOR RUNNING**. Green pilot light.

e **LOW LEVEL**. Amber pilot light. Switched off when high level float is deactivated.

F **RESET** push button. Resets the unit after overload, and keeps alarm for 5 minutes (acoustic device etc).

G **VOLTAGE** green pilot light. Illuminated if powered.

Internal configuration

- **a** Control and selection voltage (0,1A).
- **B** Magnetic circuit breaker.
- **C** Main switch.
- **D** Contactors.
- **e** Transformer.
- **F** Conector.
- **G** Set-point pressure adjust (mod. V2T).
- **H** Maximum current adjust.
- **I** Control terminal blocks.
- **J** Pressure sensor (mod. V2T).

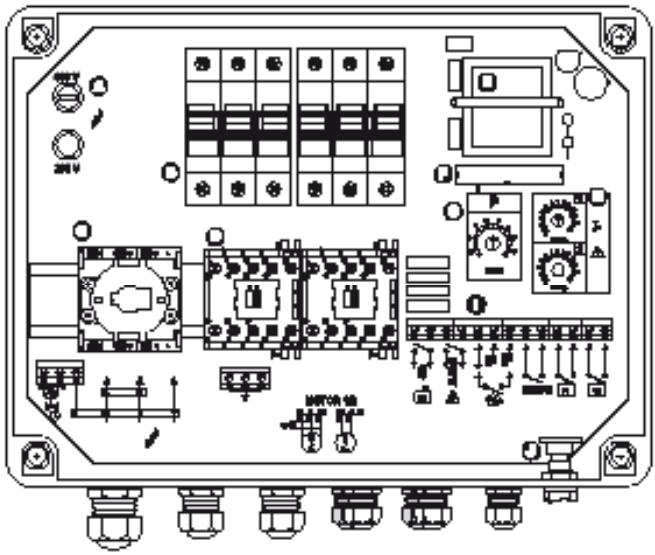

Check that all the connections are correct and that the selection voltage fuse is positioned correctly.

Installation

We recommend to connect individual connecting tag wires to the terminal block.

1) Open unit and move up the top, like in figure, to facility the connection and adjustment unit. General switch should be in OFF position.

2) Connect MAINS SUPPLY directly to MAIN SWITCH.

3) Connect the MOTORS directly to the respective contactors.

4) Connect the pressure switches to the respective terminals: “P1”: High pressure;

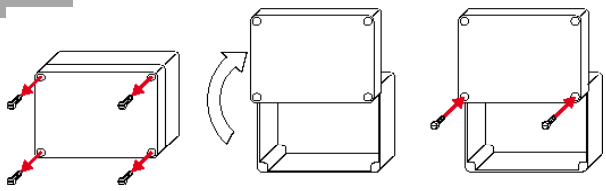

“P2”: Low pressure.
Mod. V2P.

4) Install the adaptor in the pressure tank, as high as possible, in the air chamber. Connect the flexible pipe between the adaptor and the unit. ***Mod. V2T.***

5) Connect the PROBES (if it is neccesary) to the respective TERMINALS (1: minimum, 2: maximum). Lower probe (yellow) will be install some centimetres higher than the

pump intake. Upper probe (red) will be install according to level and volume well, at suitable height for a greatest advantage of flow well performance.
The cables of probes will be sufficiently isolated, since a reinforcement contact or leak to earth could cause a bad operation of the equipment.
The maximum longitude recommended for the cables of probes is of 300 mts. and the minimum section, 0,5 mm².
A correct ground connection it is essencial for the effective operation of the level control. It is recommended to connect to any point of the pipe or the pump (screw, flange, valve), to a pick, or by means of a third probe submerged in the bottom of the recipient, in case this was insulating (glass fiber and plastics in general).
Protected against wrong connections.

6) REMOTE terminals can be connected to a remote control device (See Starting).
Protected against wrong connections.
If this input is not used, it must also be linked.

7) The controller offers two current-free contacts for alarm signalling or working (thermal gap / air level loss / high rated startings).

Wiring diagram

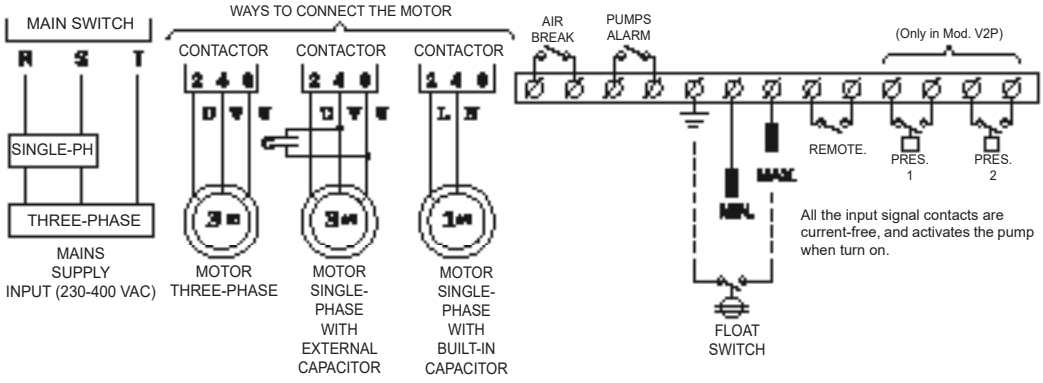

System Operation

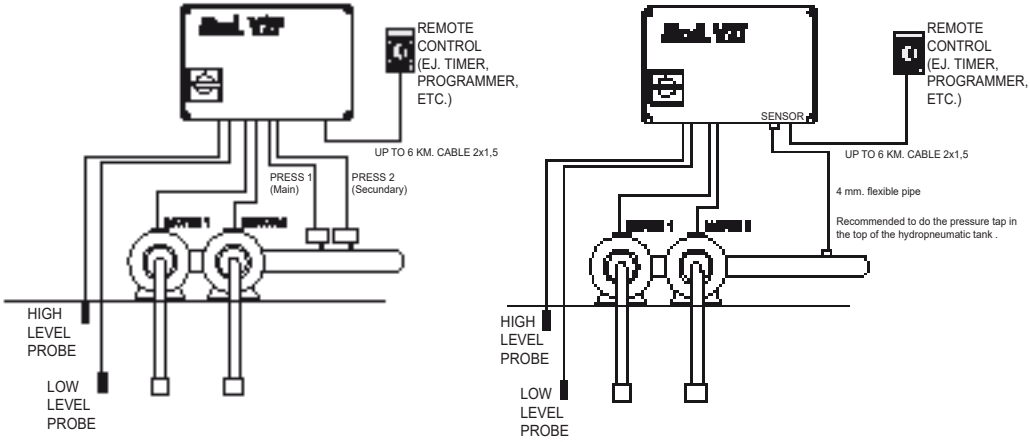

OPERATION WITH PRESSURE SWITCHES. (MOD. V2P).

P1: High level pressure switch. When closed, it starts only one pump.

P2: Low level pressure switch. When closed, it starts the second pump. In case of failure of P1 pressure switch, it starts both pumps anyway, with a delay between them.

OPERATION WITH PRESSURE LEVEL. (MOD. V2T).

STARTING: If pressure drops 10% under set point, it starts the maintenance pump with 1 second delay. If pressure remains at 10% under set point, it starts the support pump 5 seconds after.

STOP: If pressure exceeds 10% over set point, it stops the support pump with 1 second delay. If pressure remains 10% over set point, it stops the maintenance pump 7 seconds after.

OPERATION WITH AUXILIARY INPUTS.

LEVEL: In case of level loss in suction mode, both pumps stop automatically. Once level is recovered, the first pump starts with 1 second delay and the second one 5 seconds after.

REMOTE: If remote circuit opens, both pumps stop likewise, they both starting successively when circuit closes.

SUPPLY: When powered, there is a stepped starting too of both pumps, if pressure demands it.

LEVEL PROBES START-UP.

The lower level probe should be installed some centimetres over the pump suction level. The upper level probe should be located depending on well level and volume, at an appropriate height for an optimum use of well flow. It is essential for a good performance of the level control that ground connection is correct. If this is not possible, a third probe should be connected to the ground terminal block and located in well bottom. Pump (1 or 2) starts when the maximum level is reached and stops when drops to the minimum level, if pressure requests it.

Important: If level probes are not to be used, maximum and ground terminal blocks must be linked.

PUMP THERMAL PROTECTION.

In case of overload in any of the pumps, or phase failure, there will be a thermal trip of the pump 7 seconds after anomaly detection. During these 7 seconds, alarm pilot light is flashing.

AUTOMATIC RESET SWITCH.

Located on the back side of the unit front cover, it has two positions:

A POSITION (RESET ON): In case of thermal failure trip happened after the first minute of pump running, the pump turns to reset alarm mode. In this case, the pump alarm pilot light remains switched on, but turns off for an instant (0.5 seconds) every 4 seconds. In 15 minutes, the pump will be automatically reset.

B POSITION (RESET OFF): In case of thermal failure trip, reset is only available manually, pushing the reset button.

PUMP ALTERNATION DUE TO ALARM.

In case of maintenance pump thermal failure, the second pump substitutes it.

ALARM OUTPUT (ALARM).

Alarm output closes contact 6 seconds after level loss failure, or thermal failure in any of the pumps. Once level is restored or alarms reset, this output is disconnected after 2 seconds delay.

AIR BREAK ALARM (AIR).

This alarm is activated if the maintenance pump tries to re-start within an interval lower than 2 minutes. The output is activated only while the maintenance pump is running. If the start intervals reach 3 minutes, this alarm will be automatically disconnected. Pressing the reset button deactivates the air break alarm too.

PUMP JAMMING PREVENTION.

To prevent pump jamming (long resting periods), the unit activates it for 1 second every 23 hours of inactivity (only in AUTO mode).

System adjustment

The adjustment is possible only if the motor is connected to the unit, otherwise, the low current alarm will be activated. Also, pump adjustment should be made in “0” position, otherwise the second pump is started due to overload in the first pump.

Light ON Light FLICKS OFF

Maximum Current Adjustment

1.-

- Turn right to the limit
- Start motor.
- Green.

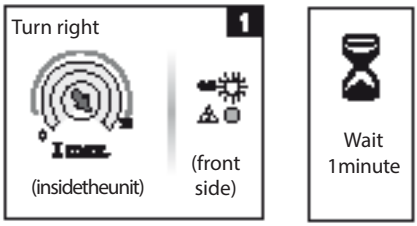

2.-

- Turn slowly to the left until red light flicks.

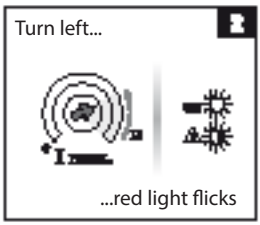

3.-

- Then, turn slightly to the right until red light stops flickering (OFF).

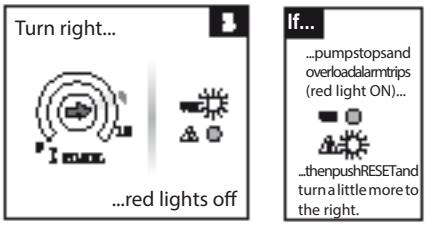

Warning: Adjustment to the maximum value (13A) cancels any protection.

System Operation

Once fit the set point pressure, the equipment will fix maximum and minimum levels, situated on 10 per cent upper and lower the set point. In this case, the unit will control the pumps to keep the pressure within this range.

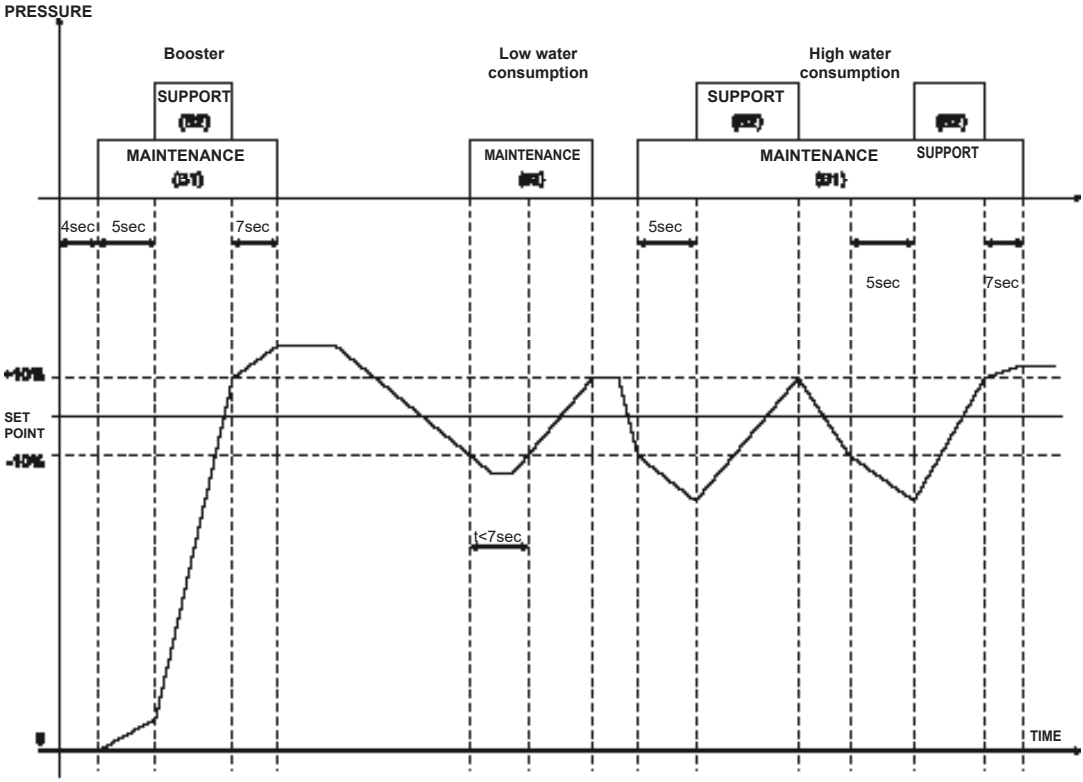

Booster.

- When activating the equipment,there is a small starting delay of 4 seconds, with the purpose of avoiding the instantaneous starting of the pumps.
- As at the begining the pressure is below the minimum, it will start the maintenance pump.
- If in 7 seconds the pressure has not raised over the minimum level, it will take the support pump.
- When pressure goes up over the maximum level, the support pump will stop.
- If pressure stays 5 seconds over the maximum level, the maintenance pump will also stop.

Low water consumption.

- If pressure falls below the minimum level, the maintenance pump starts.
- If before 7 seconds the pressure raises over the minimum, the support pump will not enter.
- Once reached the maximum level, the maintenance pump stops.

High water consumption.

- When falling the pressure below the minimum level, the maintenance pump starts.
- If pressure stays below the minimum more than 7 seconds, the support pump will start.
- Once both pumps booster the pressure until the maximum level, support stops.
- As when stops support the pressure decreases, maintenance will not stop.
- Once again pressure goes down until the minimum level, the support pump will start again.
- If the pressure stays more than 5 seconds on the maximum, maintenance will stop.

Specifications

Voltage	230 / 400 Vac (selec.) - 50/60 Hz
Permissible voltage fluctuations	+10% - 15%
Maximum current	12 Amp (for each pump) AC3
Overload adjustment	0-13 A (adjustable)
Underload trigger	<0,5 A
Probe voltage/sensitivity	24 Vac / 9 Kohm
Remote connection	Contact or voltage 6 to 400 Vac/Vdc
Pressure switch connection (Mod. V2P)	12 Vdc - 10 mA
Set-point pressure adjustment (Mod. V2T)	2 - 9 Kg / cm²
Differential (Mod. V2T)	±10 %
Maximum pressure permissible (Mod. V2T)	40 Kg / cm²
Accuracy (Mod. V2T)	±0,1 Kg / cm²
Pressure tank connection (Mod. V2T)	Flexible (ø4 mm) tube with racor
Input connection (power supply)	Direct to main switch
Output connection (motor pump)	Direct to contactor 4 mm²
Mounting	Clevis wall mounting
Weight	3,5 Kg
Protection	-10 + 55 ºC
Operating temperature range	IP56

Troubleshooting

Problem	Cause	Solution
• The equipment does not work and the voltage light is off even when the system is connected to a power source.	• Selection voltage fuse is fused (fuse 0,1 A). • Incorrect input connection (single-phase installation). • Phase failure.	• Check and replace selection voltage fuse (5x20 / 0,1A). • Connect correctly. • Check phase state.
• The equipment works but the contactor do not.	• Voltage selection fuse incorrectly positioned.	• Select the correct position according to the entry voltage.
• The motor alarm lights on (Light indicator “C”).	• Inside overcurrent adjustment very low or critical. • Mains phase failure. • Motor overload. • Motor underload.	• Check the overcurrent adjustment. • Check the three phases. • Check the pump (jammed impeller, over/under voltage conditions,overcharge, etc.). • Check the pump (dry well, dead head, etc.).
• Level control do not running correctly.	• High and low level probes, inverted. • Ground connection incorrect. • Probes or Remote wire cut..	• Place the probes in correct position. • Check the ground connection. • Check the ground connection..



EC DECLARATION OF COMPLIANCE WITH THE "LOW VOLTAGE" & "ELECTROMAGNETIC COMPATIBILITY" DIRECTIVES.

TOSCANO LINEA ELECTRONICA, S.L. declares that the equipment described in this manual complies with the provisions of the modified "LOW VOLTAGE" directive (Directive DC 2004/108/CE) and with the modified "ELECTROMAGNETIC COMPATIBILITY" directive (Directive DC 2006/95/CE) and with national legislation based upon them. It also complies with the provisions of the following European standards and draft standards:

NF EN 60.439-1 / EN 50.081-1 / EN 50.082-2 .

Toscano Línea Electrónica, S.L.
P.I. La Isla c/Río Viejo, 50 - 41700 -
Dos Hermanas - SEVILLA - SPAIN - (+34) 954
999 900 - www.toscano.es - info@toscano.es

Custom Service
+34 954 999 900
English interviwer

toscano
ISO9001:2000 Certified by Bureau Veritas