Programming

Push RESET button for more than 10 seconds to start the programming.

SHEET 1.
RESET TIME PROGRAMMING (MINUTES)

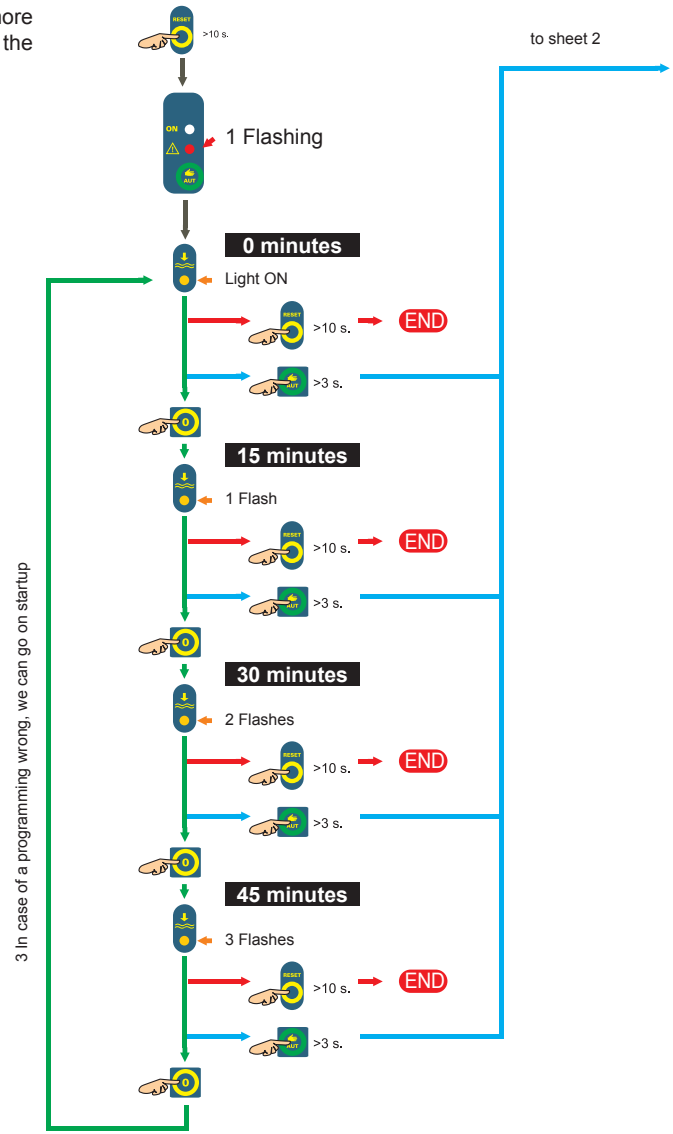

SHEET 2.
RESET TIME PROGRAMMING (HOURS)

NOTE: This time will add to previous paragraph programming minutes.

to sheet 3

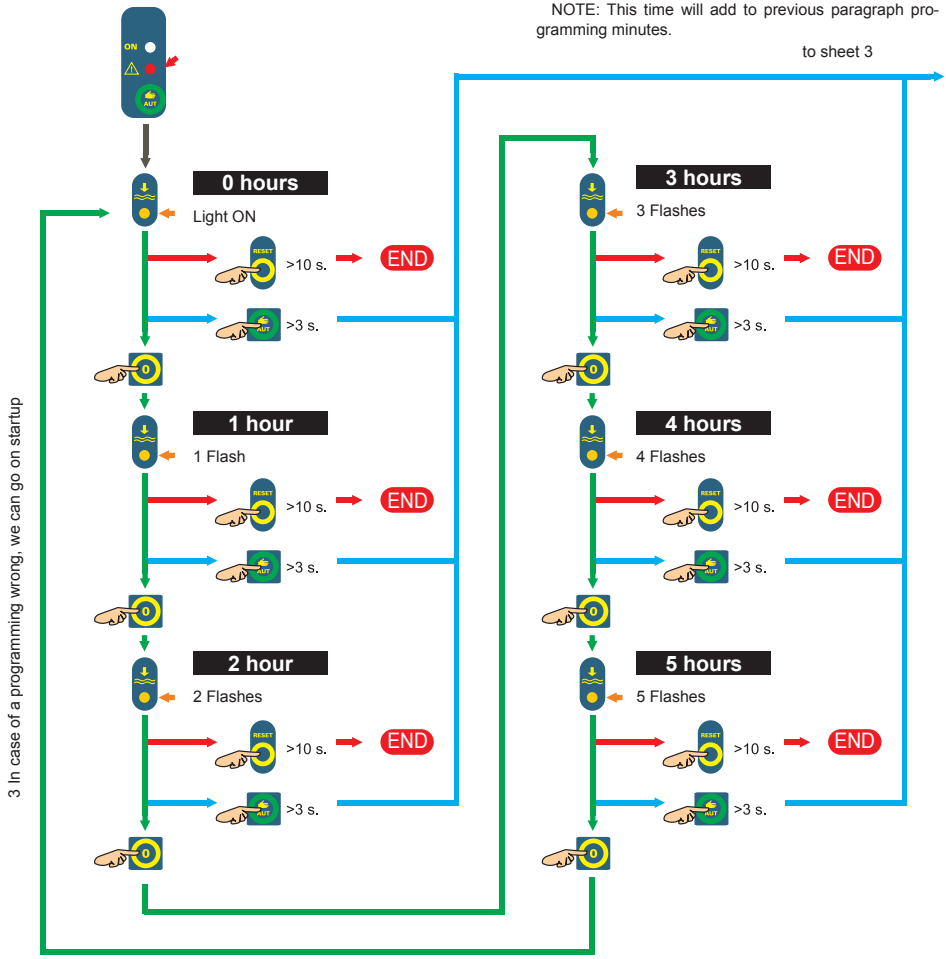

Special programming: 5 minutes

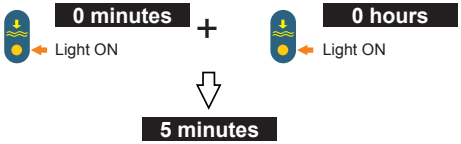

SHEET 3.
OUTPUT RELAY PROGRAMMING MODE

