COMPACT BACKUP SYSTEM

DATASHEET

COMBI-PRO-MAX 2.1

Control and protection system for **backup applications and island operation.** Integrates POP, ARD and MCB.



COMBI-PRO-MAX-2P-2.1



COMBI-PRO-MAX-4P-2.1

Dimensions

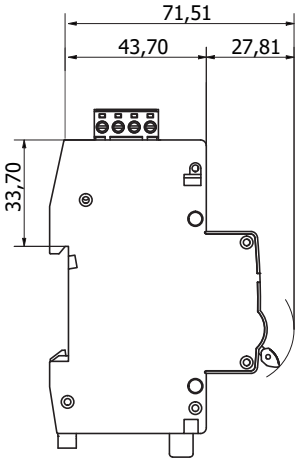

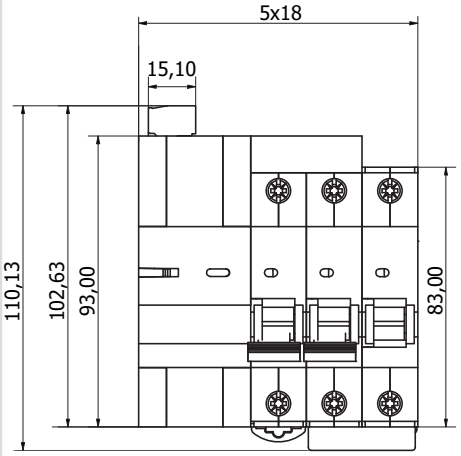

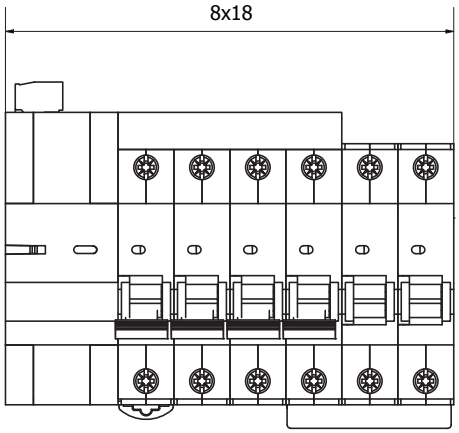

Electrical diagrams

COMBI-PRO-MAX-2P-2.1

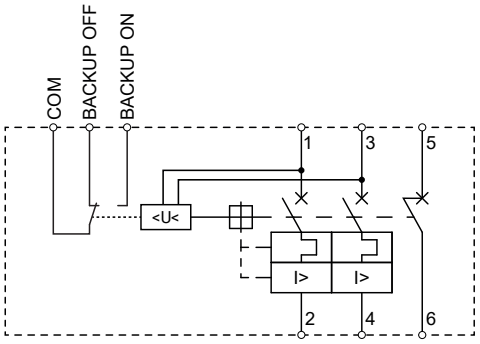

COMBI-PRO-MAX-4P-2.1

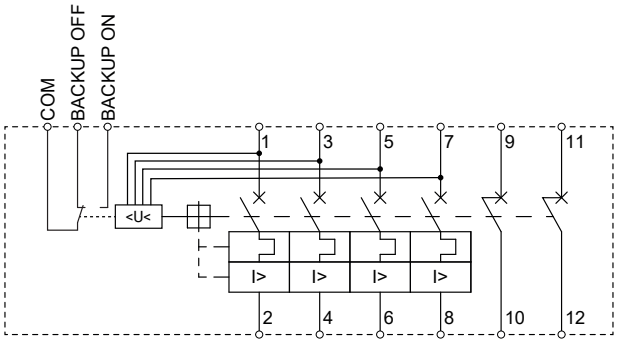

toscano

Technical specifications

		COMBI-PRO-MAX-2P-2.1	COMBI-PRO-MAX-4P-2.1
GENERAL	Rated Voltage Un	240 VAC (L/N)/(L/L)	
	Supply frequency	50-60 Hz	
	Maximum power consumption	5 W	
	Rated power consumption	1.5 W	
	Maximum terminal cross-section	25 mm^2 (power) / 2.5 mm^2 (control)	
	Environmental limits	-25°C +55°C / 93% R.H.	
	No. of DIN modules	5	8
BACKUP	Response time	2 s	
	Reconnection time	180 s	
	Contact	12 VAC/VDC, 0.1 A	
PERM.	Disconnection voltage	according to standard IEC 63052	
	Disconnection time		
	Reconnection voltage	<255 V ± 2 %	
	Reconnection time	200 s ± 5 %	
UNDERVOLT.	Disconnection voltage	<170 V ± 2 %	
	Disconnection time	10 s ± 5 %	
	Reconnection voltage	>200 V ± 2 %	
	Reconnection time	200 s ± 5 %	
MCB	Rated current In	16, 20, 25, 32, 40, 50, 63 A (according to model)	
	Tripping curve code	C	
	Energy limiting class	3	
	Insulation voltage Ui	500 V	
	Rated impulse withstand voltage Uimp	4 kV	
	Breaking Capacity (I_{cn})	6 kA	
	Rated operating short circuit breaking capacity (Ics)	6 kA	
MECHANICAL	Protection degree	IP20	
	Polution degree	2	
	Tightening torque	2.5 Nm	
	Mounting	Rail DIN 35 mm	
	Approx. average weight	450 g	700 g
	Approx. packed weight	500 g	800 g
	Dimensions (width x height x depth)	90 x 90 x 71 mm	140 x 90 x 71 mm

COMPLIANCE	POP	IEC 63052
	MCB	IEC 60898
	ARD	IEC 63024
	Directives	2014/35/UE (LVD) 2014/30/UE (EMC) 2011/65/UE (RoHS)

TRIPPING CURVE

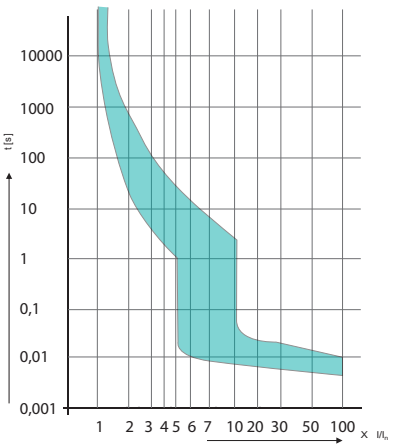

vigivolt

Models

COMBI-PRO-MAX-2P-2.1

Code	Reference
10006161	COMBI-PRO-MAX-2P16-2.1
10006162	COMBI-PRO-MAX-2P20-2.1
10006163	COMBI-PRO-MAX-2P25-2.1
10006164	COMBI-PRO-MAX-2P32-2.1
10006165	COMBI-PRO-MAX-2P40-2.1
10006166	COMBI-PRO-MAX-2P50-2.1
10006167	COMBI-PRO-MAX-2P63-2.1

COMBI-PRO-MAX-4P-2.1

Code	Reference
10006168	COMBI-PRO-MAX-4P16-2.1
10006169	COMBI-PRO-MAX-4P20-2.1
10006170	COMBI-PRO-MAX-4P25-2.1
10006171	COMBI-PRO-MAX-4P32-2.1
10006172	COMBI-PRO-MAX-4P40-2.1
10006173	COMBI-PRO-MAX-4P50-2.1
10006174	COMBI-PRO-MAX-4P63-2.1

Compatible inverters

COMBI-PRO-MAX-2P-2.1	COMBI-PRO-MAX-4P-2.1
Huawei SUN2000-(2KTL-6KTL)-L1	Huawei SUN2000-(3KTL-12KTL)-M1
Huawei SUN2000-(8K-10K)-LC0	Huawei SUN2000-(12K-25K)-MB0
Huawei SUN2000-(3K-6K)-LB0	Huawei SUN5000-(17K,25K)-MB0
Kostal Plenticore MP G3	Huawei SUN2000-(5K-12K)-MAP0
GROWATT MIN-(2500-6000)-TL-XH	Huawei SUN5000-(8K,12K)-MAP0
SIGENERGY Sigen Hybrid SP2	Kostal Plenticore G3
SIGENERGY SIGENSTOR SP	SIGENERGY SIGEN Hybrid TP2
	SIGENERGY SIGENSTOR TP

Cod. 50023353. Ed. 7.26

Scan for more information:

Toscano Línea Electrónica, S.L.
P.I. La Isla c/Río Viejo, 50 - 41700 - Dos Hermanas - SEVILLA - SPAIN - (+34) 954 999 900 - www.toscano.es - info@toscano.es

vigivolt