vigivolt

TMAC-80/100/125

Thermal-magnetic circuit breaker with overload and short-circuit protection.

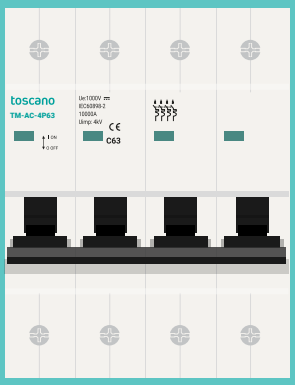

EN

USER MANUAL

Cod. 50023794. Ed. 1.26

WARNING!	HAZARD OF ELECTRIC SHOCK, EXPLOSION, OR ARC FLASH
- The installation, maintenance and eventual replacement of this device must only be carried out by a qualified electrician. - This device must not be repaired. - All applicable local, regional and national regulations must be complied with during the installation, use, maintenance and replacement of this device. - This device should not be installed if, when unpacking it, you observe that it is damaged. - Toscano cannot be held responsible in the event of non-compliance with the instructions in this document and in the documents to which it refers. - For the correct operation of the equipment, the phases must be connected to the "L" terminals and the neutral to the "N".	- Turn off all power supplying this device before working on it. - Use a voltage tester on an appropriate scale to verify that all live conductors are not energized. - Failure to comply with these instructions may result in serious injury or death.

Dimensions

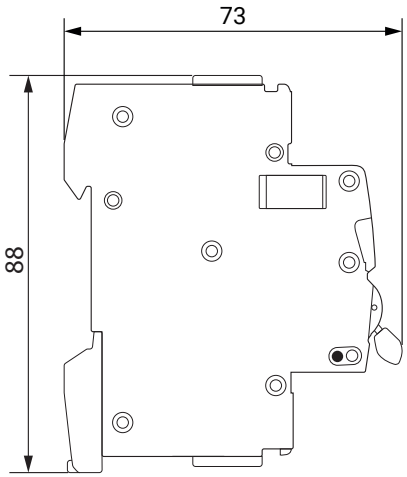

TMAC2P-80/100/125

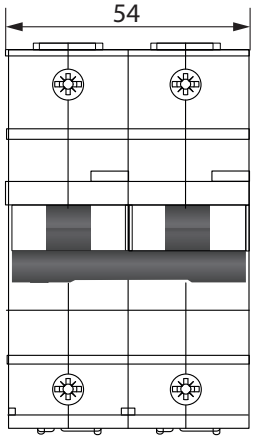

TMAC4P-80/100/125

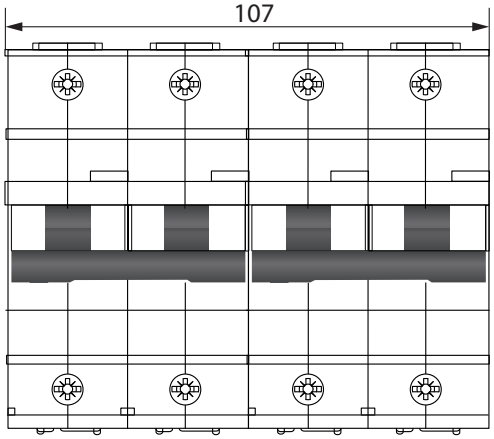

Electrical diagrams

TMAC2P-80/100/125

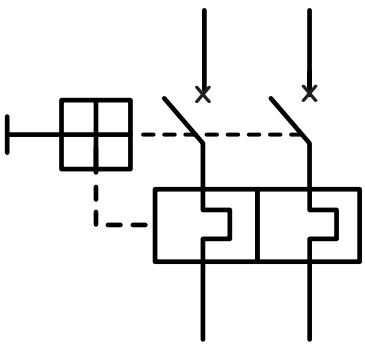

TMAC4P-80/100/125

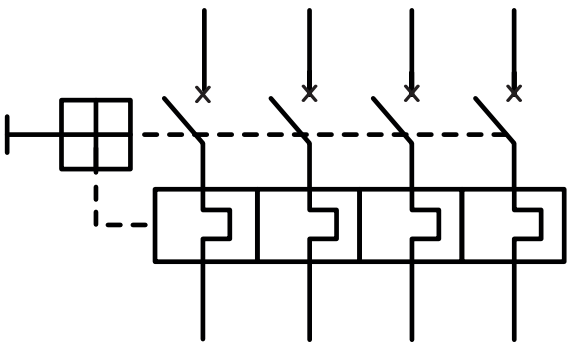

Wiring

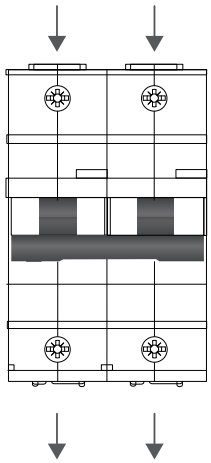

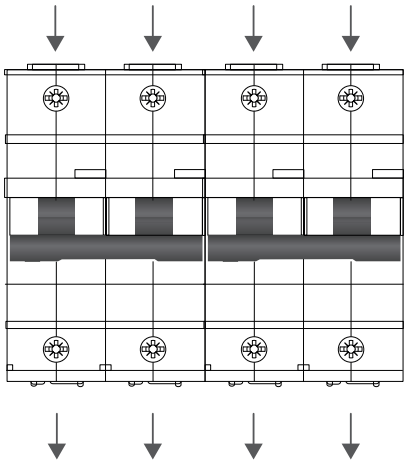

Technical specifications

		TMAC2P-80/100/125	TMAC4P-80/100/125
GENERAL	Rated voltage Un (L-N / L-L)	230 VAC / 400 VAC	
	Frequency	50-60 Hz	
	Tightening torque	2 Nm	
	Maximum terminal cross-section	25 mm^2	
	Environmental limits	-5º +40º C / 93% R.H.	
	Protection	IP20	
	Mechanical indicator	Yes	
	Electrical and mechanical life	20000 cycles	
	Mounting	Rail DIN 35 by means of fast clip device	
	Nº of DIN modules	3	6
	Dimensions (width x height x depth)	54 x 88 x 73 mm	107 x 88 x 73 mm
	Average weight approx.	320 g	650 g
	Approx. packed weight	345 g	690 g
ELECTRICAL	Rated current In	80 / 100 / 125 A	
	Nº of poles	2	4
	Energy limiting class	3	
	Insulation voltage Ui	500 V	
	Rated impulse withstand voltage Uimp	4 kV	
	Thermal-magnetic tripping curve	C	
	Rated breaking capacity Icn	6 kA	
	Rated operating short circuit breaking capacity (Ics)	6 kA	
COMPLIANCE	Directives	2014/35/UE (LVD) 2014/30/UE (EMC) 2011/65/UE (RoHS)	
	Standards	IEC 60898-1	

TRIPPING CURVE

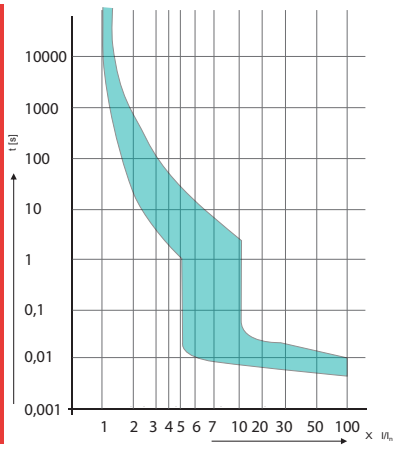

Operation

TMAC circuit breakers protect circuits against short-circuit currents and overload currents. They are used in domestic installations, as well as in industrial and commercial electrical distribution systems.

Cod. 50023794. Ed. 1.26

Scan for more information:

toscano

Toscano Línea Electrónica, S.L.
P.I. La Isla c/Río Viejo, 50 - 41700 - Dos Hermanas - SEVILLA - SPAIN - (+34) 954 999 900 - www.toscano.es - info@toscano.es