SURGE PROTECTIVE DEVICE - SPD

DATASHEET

V2T-15B

Module for protection against **transient overvoltages.**
Type 2.
For two-phase lines, no neutral.



Dimensions

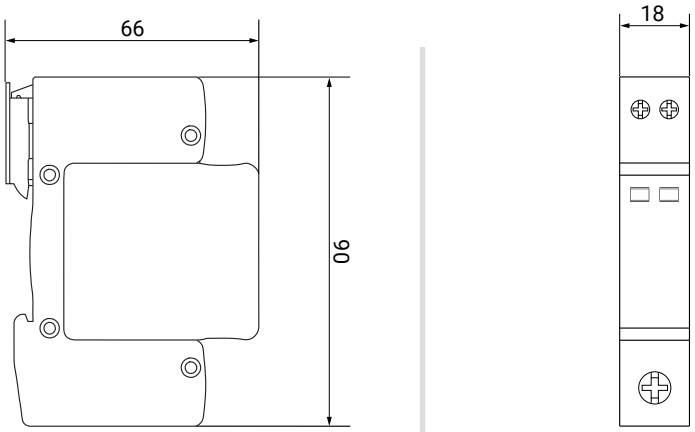

Electrical diagram

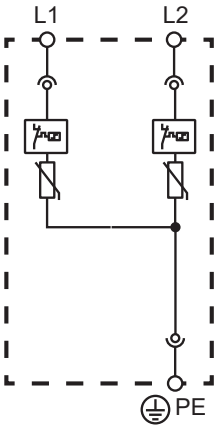

Models

Code	Reference
10002749	V2T-15B
10003714	V2T-15B + MODULO

Scan for more information:

toscano

Technical specifications

GENERAL	Rated voltage Un (L-L)	230 VAC
	Maximum voltage Uc (L-L)	320 VAC
	Frequency	50-60 Hz
	Maximum terminal cross-section	16 mm^2 (L) / 25 mm^2 (PE)
	Tightening torque	2.5 Nm
	Upstream protective fuse	63 A gG
	Environmental limits	-40 ºC +80 ºC / 95% R.H.
	Degree of protection	IP20
	Mounting	Rail DIN 35
	No. of DIN modules	1
	Dimensions (width x height x depth)	18 x 90 x 66 mm
	Approx. average weight	105 g
	Approx. packed weight	120 g
OVERVOLTAGE	Protection level Up	≤1.5 kV
	Maximum discharge current (8/20µs) Imax (L-L / L-PE)	15 kA
	Rated discharge current (8/20µs) In (L-L / L-PE)	8 kA
	Overvoltage response time	≤25 ns
	Type	2
COMPLIANCE	Directives	2014/35/UE (LVD) 2014/30/UE (EMC) 2011/65/UE (RoHS)
	Standards	IEC / EN 61643-11

Cod. 50023388. Ed. 2.26

Toscano Línea Electrónica, S.L.
P.I. La Isla c/Río Viejo, 50 - 41700 - Dos Hermanas - SEVILLA - SPAIN - (+34) 954 999 900 - www.toscano.es - info@toscano.es