toscano

HIDRONIVEL TH3

Water Level Controller (one probe with restart time delay)

Main features

Probe level sensing relay based on a conductive system. Well control. Adjustable sensitivity. Adjustable reset time. 230 or 400 V dual voltage supply. Plugs into 11-pin base. Low level probe.



Probe installation

Well: install the low level probe (min.) above the suction valve.

IMPORTANT: the probe leads, connections and wires must be well insulated, since a faulty ground contact would cause malfunction.

Reset time adjustment (fig. A, 4)

The reset time can be adjusted as required from 1 to 30 minutes on the corresponding potentiometer (”4”).

Connection

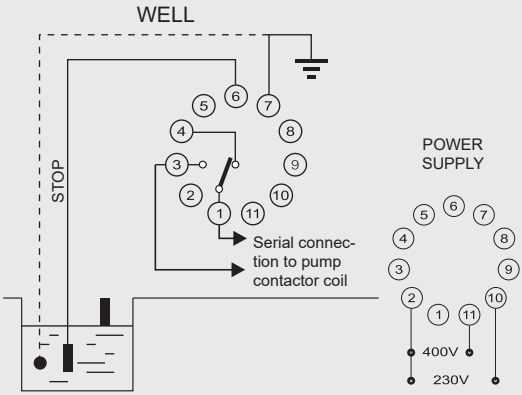

Warning

CHECK THE CONNECTIONS BEFORE STARTING THE EQUIPMENT. A WRONG WIRING CAN INVOLVE DANGER OF ELECTROCUTION.

Ground connection (terminal block 7)

To ensure that the level controller works as required is essential a correct ground connection. Make the connection to any part of the piping or pump (screw, clamp, valve, etc.) to a ground screw or by means of a submerged probe installed at the bottom of the container if the well or tank are made of an insulating material (fiberglass or plastics in general).

Frontal Description

Fig. A

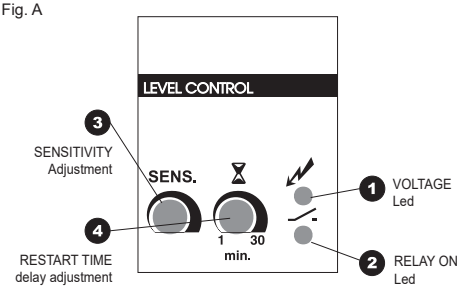

Sensitivity adjustment (Fig.A, 3)

The unit is adjusted to the highest sensitivity setting when it leaves the factory. The level controller should work perfectly at this setting, except in specific installations where certain factors, such as high humidity, long distance betwen probes and level controller or probe lead-to-ground capacitance, require sensitivity to be lowered to prevent the level controller from being activated by these circumstances.

Troubleshooting

In order to verify that the level controller is operating correctly:

1. Check voltage (230 V in terminal blocks 2-10 /4000 V in terminal blocks 2-11).

2. Disconnect probe leads from the terminal blocks.

3. Switch on power to the level controller (green indicator “1” lights up). Make link between terminal blocks 6 and 7 (the relay remains shutdown and the red indicator light “2” flashes for the reset time set on the corresponding potentiometer).

4. After this time has elapsed, the red indicator light becomes fixed and the relay is activated. Remove the link between terminal blocks 6 and 7, whereby the relay is shutdown and the red indicator lights down.

If the level controller operates as required during these tests, check that the well or tank are properly grounded when the probes are connected.If it is not, because the well or tank are made of an insulating material, install a third probe on terminal block 7 at the bottom of the well.

Size

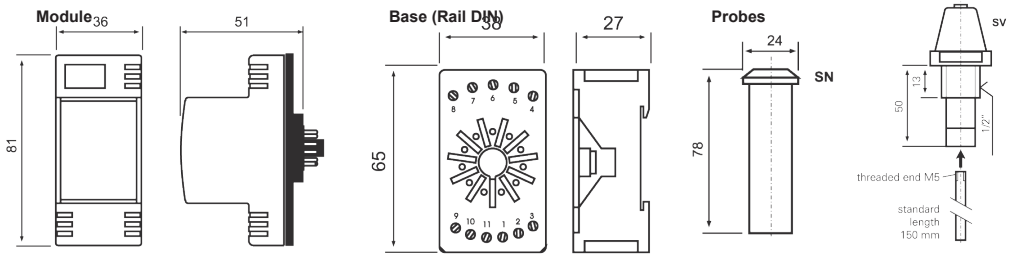

Technical features

LED status indication	VOLTAGE and ACTIVATED RELAY
Supply Voltage	230/400V AC - 50/60 Hz (consult for other voltages)
Power consumption	2 VA
Permissible voltage fluctuations	+10% -20%
Temperature range	-10º +60º C
Reset time	Adjustable 1 - 30 minutes
Response sensitivity	Adjustable 3 to 60 Kohm.
Probe / sensor voltage	12V AC
Probe intensity	0,6 mA máx. en cortocircuito
Terminal block maximum section	2 x 2,5 mm²
Load contact	AC1 : 10 A - 250V AC AC11 : 2,5 A - 230V AC DC1 : 1 A - 250V DC DC11 : 5 A - 24V DC
Approximate average weight	140 grs (260 grs. incl. base and 1 probe)