UF3

Monitoring and phase loss / reversal relay

tcontrol

user manual

Description

> Self-extinguished material VO.
> Compact size - 1 module - 17.5mm.
> Output relay 1 pole changeover contact.
> DIN rail mounting EN50022.
> Universal three-phase supply 200...450 VAC.



Wiring

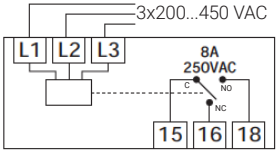

WARNING

CHECK THE CONNECTIONS BEFORE STARTING THE EQUIPMENT. AN ERROR THEREOF MAY INVOLVE ELECTRIC SHOCK HAZARD.

Specifications

Power supply	3x200...450 VAC
Frequency range	47...63 Hz
Power consumption	1,9 W
Output relay	8 A, 250 VAC / 24 VDC
Working temperature	-10 ... +50 °C
Indication	Supply (green) Relay (red)
Protection	IP20
Weight	60 g
Dimensions	98 x 17,5 x 64 mm

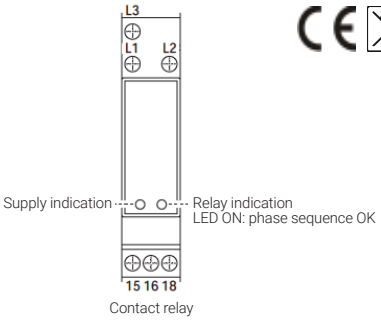

Operation

