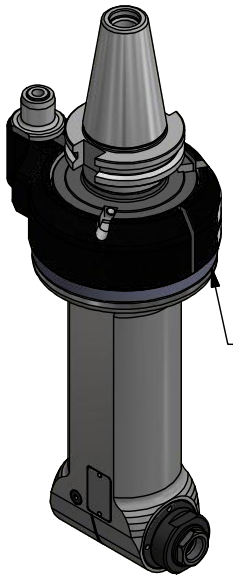

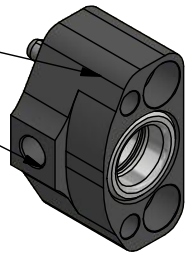

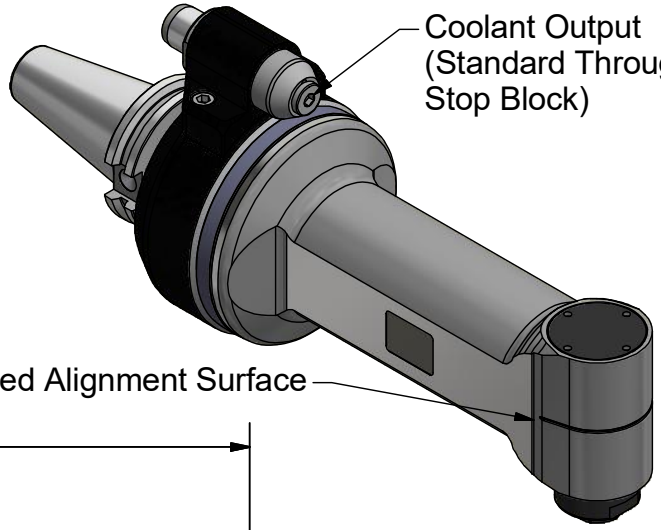

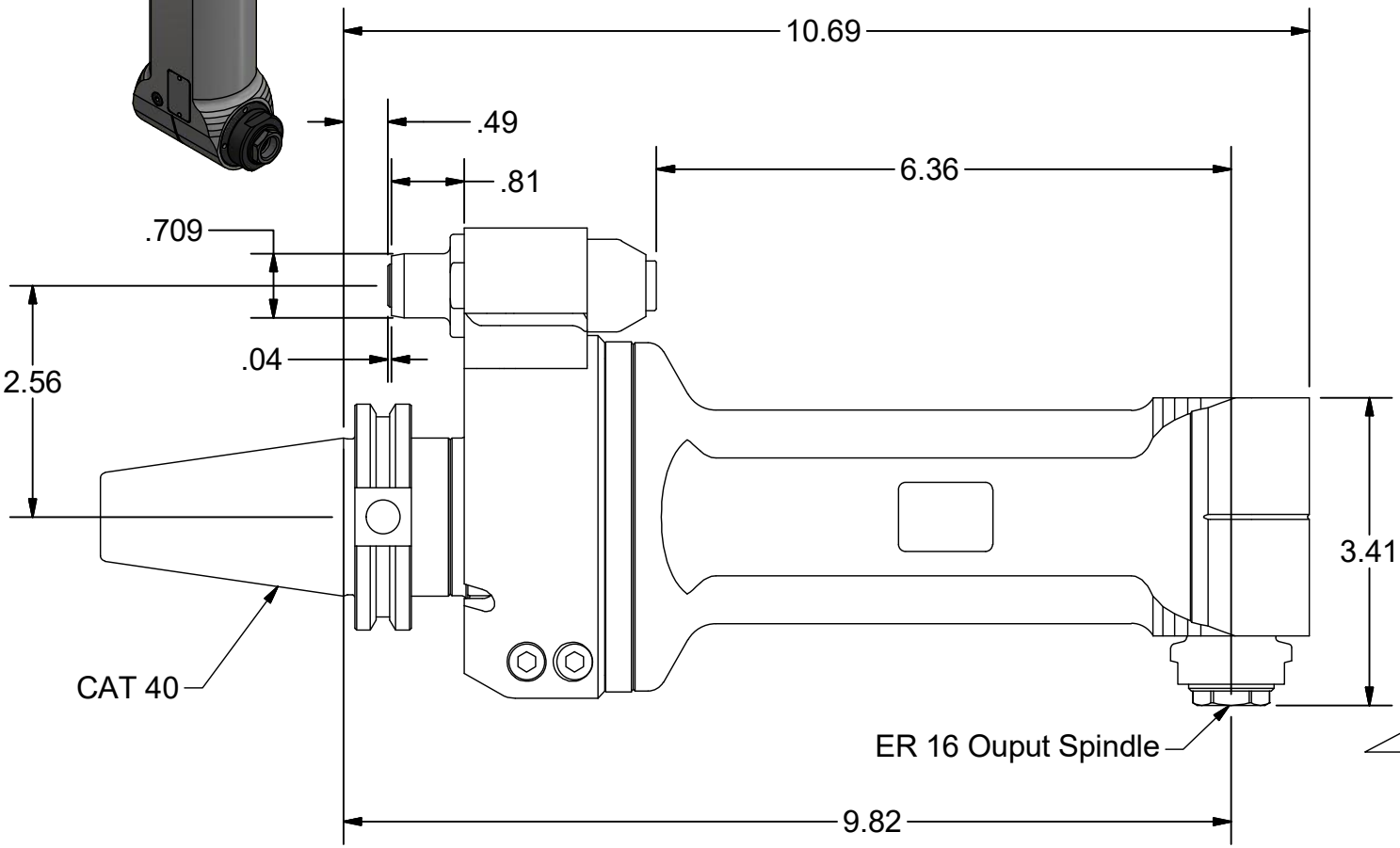

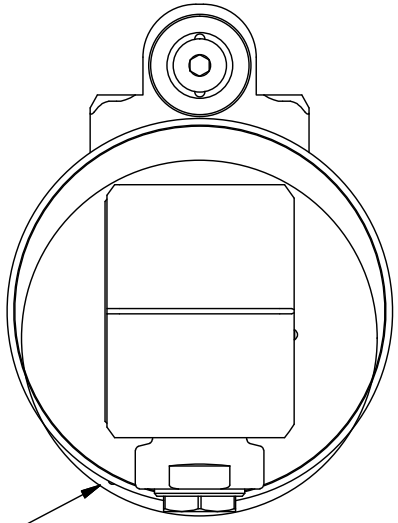

ITEMS SHOWN ON THIS DOCUMENT CONTAIN PROPRIETARY INFORMATION OF PARLEC INC. AND IS SUBJECT TO BEING RETURNED UPON REQUEST. IT SHALL NOT BE REPRODUCED IN WHOLE OR PART WITHOUT WRITTEN PERMISSION OF PARLEC INC. ANY AUTHORIZED REPRODUCTION MUST BEAR THIS ENTIRE LEGEND.

PART NUMBER 9.F90.10L00-1C40

PARLEC
(800) TOOL USA
WORLD HEADQUARTERS
101 PERINTON PARKWAY
FAIRPORT, NEW YORK 14450