Parts List				
ITEM	QTY	PART NUMBER	DESCRIPTION	
1	4	029-965	SET SCREW,M4 x 6 W/360 DEG. PATCH	
2	1	BS-SFM161-20	ADJUSTING SCREW	OPTIONAL

JIS	MAS 403 BT
DIN	69882-8

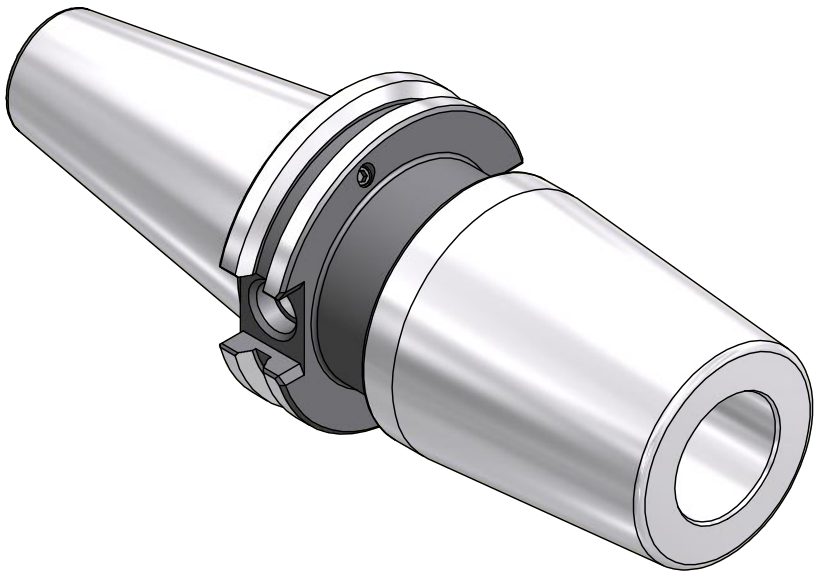

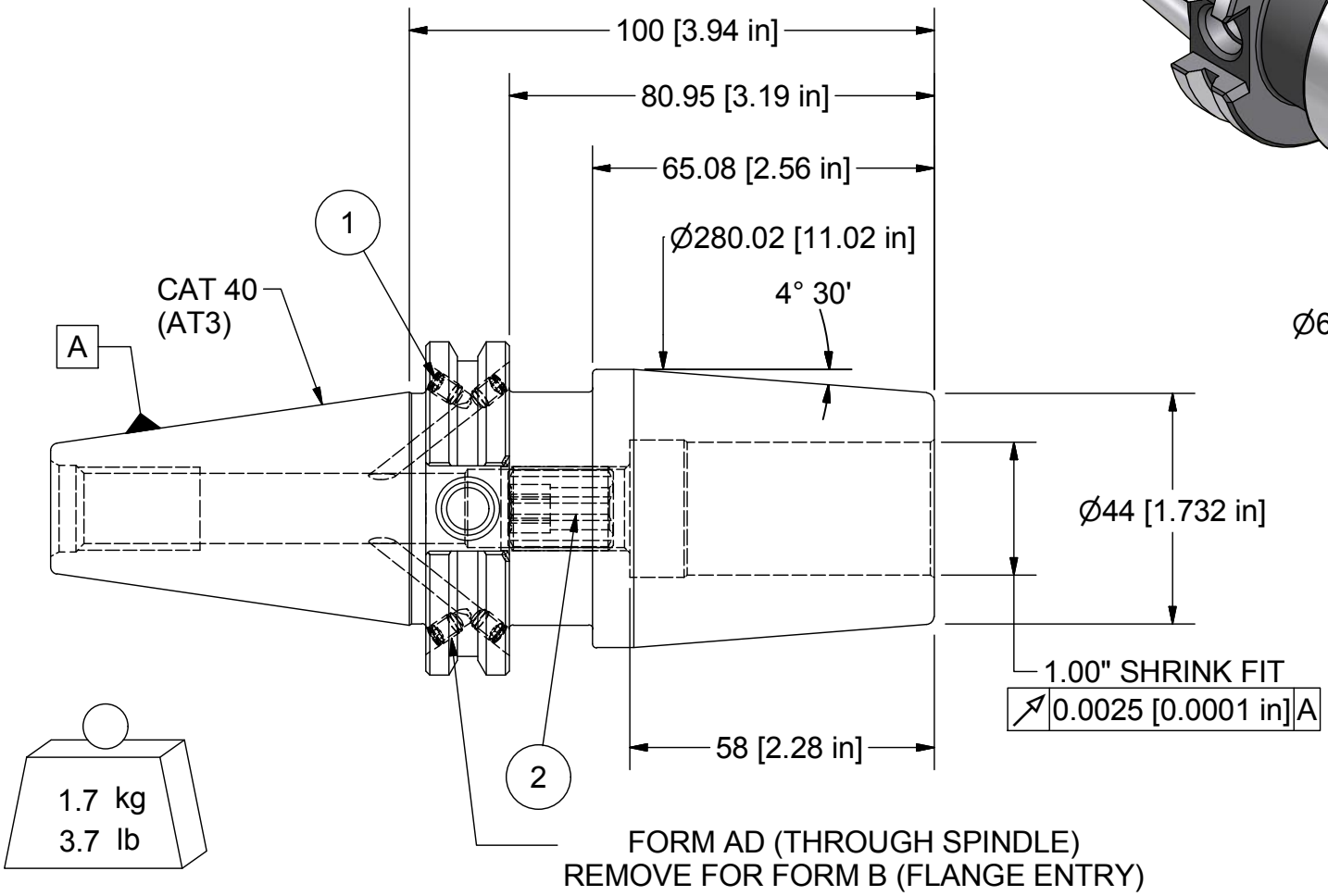

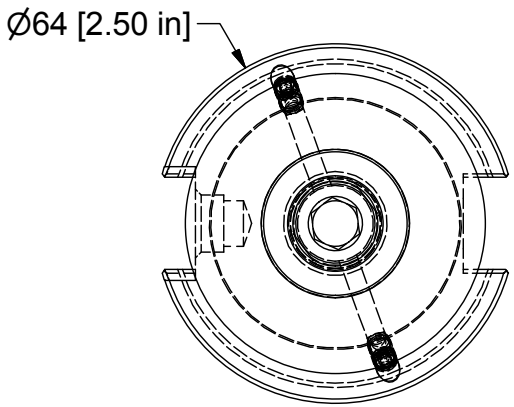

BALANCE
G2.5 @ 20,000 RPM

PART NUMBER C40-10SF394-9

PARLEC
(800) TOOL USA
WORLD HEADQUARTERS
101 PERINTON PARKWAY
FAIRPORT, NEW YORK 14450