Parts List			
ITEM	QTY	PART NUMBER	DESCRIPTION
1	1	16ERHPN	COLLET NUT, ER16
2	1	BS-20	BACK-UP SCREW, 7/16-20 LH X 3/8

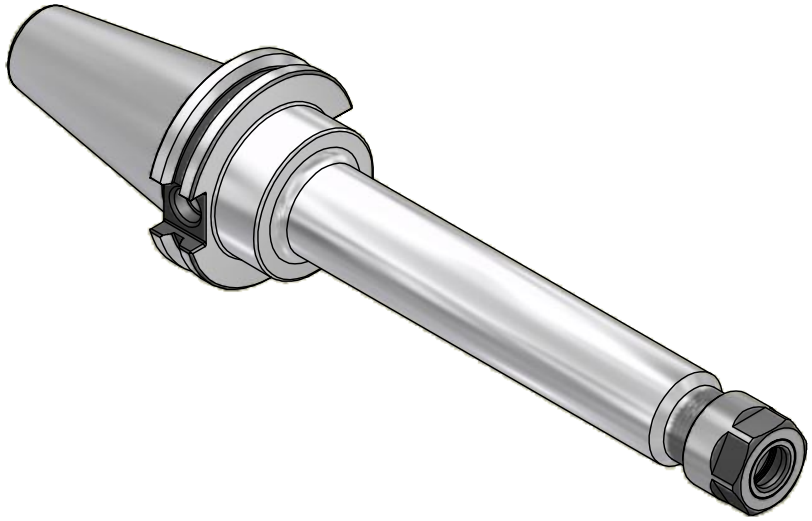

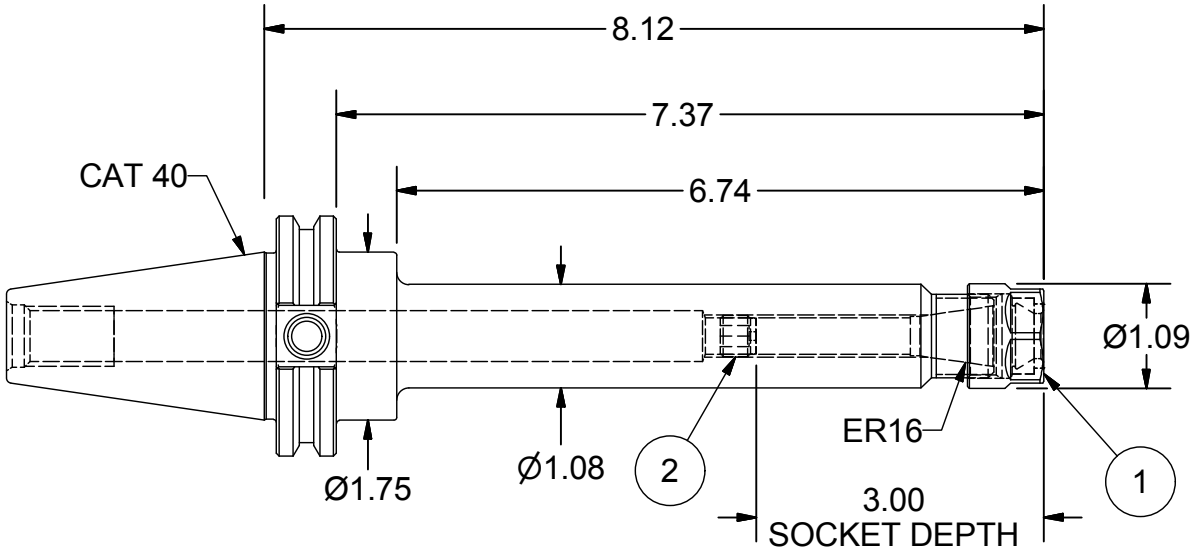

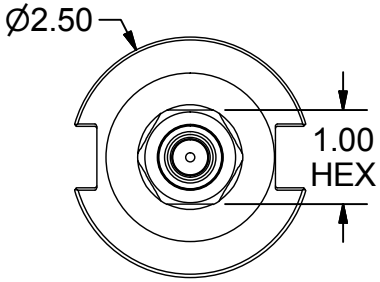

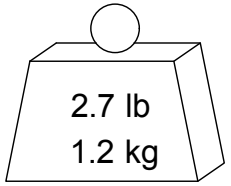

PART NUMBER

C40-16ER812

PARLEC
(800) TOOL USA
WORLD HEADQUARTERS
101 PERINTON PARKWAY
FAIRPORT, NEW YORK 14450