Parts List			
ITEM	QTY	PART NUMBER	DESCRIPTION
1	1	25ERPN	COLLET NUT
2	1	BS-11	BACK-UP SCREW, 11/16-16 L.H.

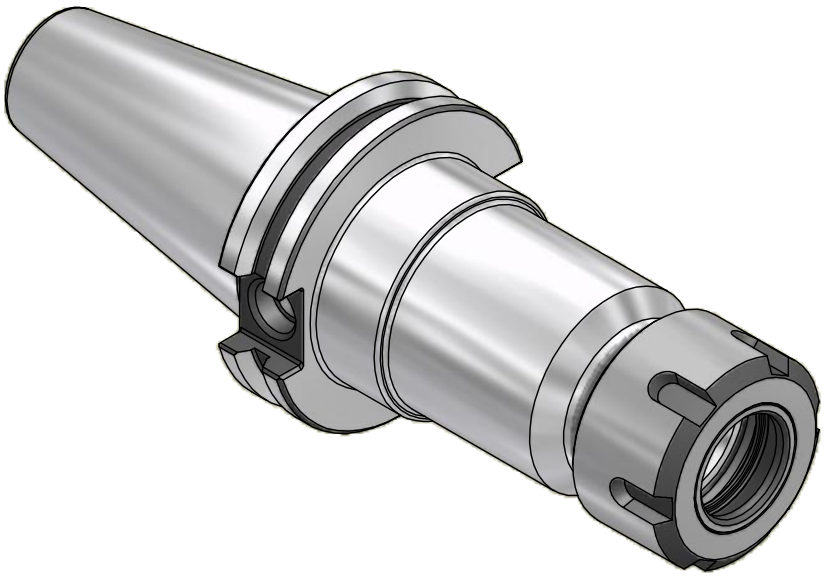

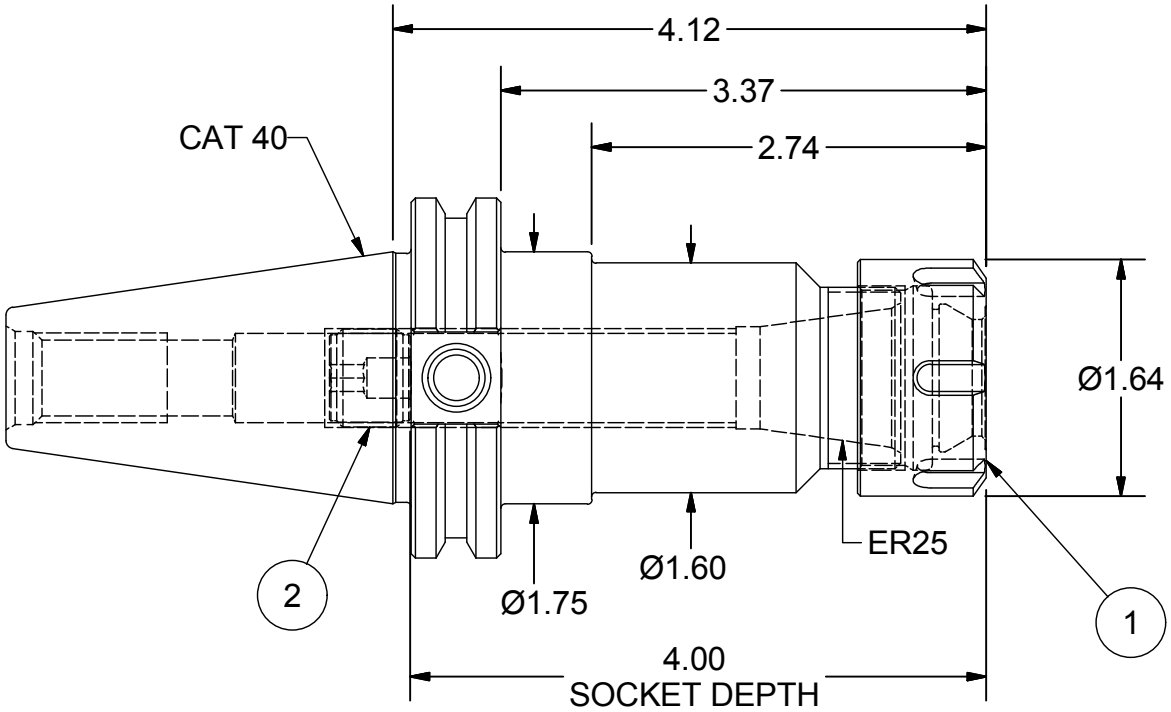

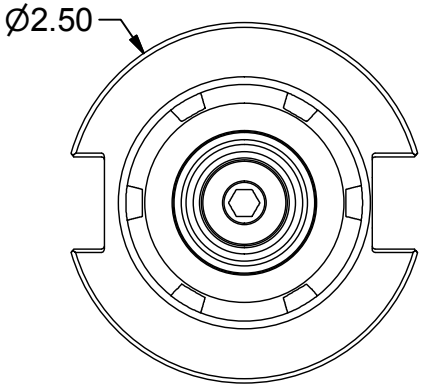

PART NUMBER

C40-25ER412

PARLEC
(800) TOOL USA
WORLD HEADQUARTERS
101 PERINTON PARKWAY
FAIRPORT, NEW YORK 14450