Parts List			
ITEM	QTY	PART NUMBER	DESCRIPTION
1	1	029-902	SET SCREW, WELDON

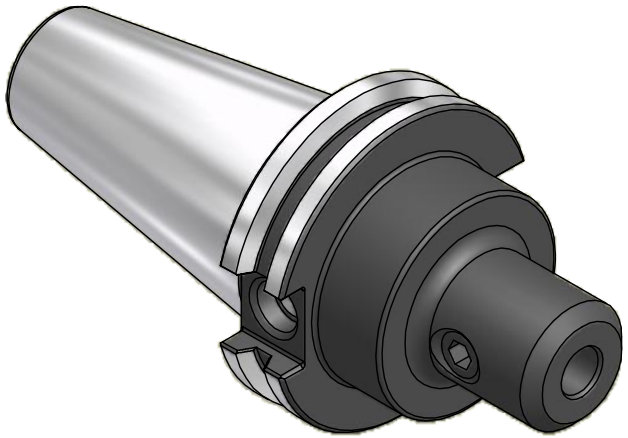

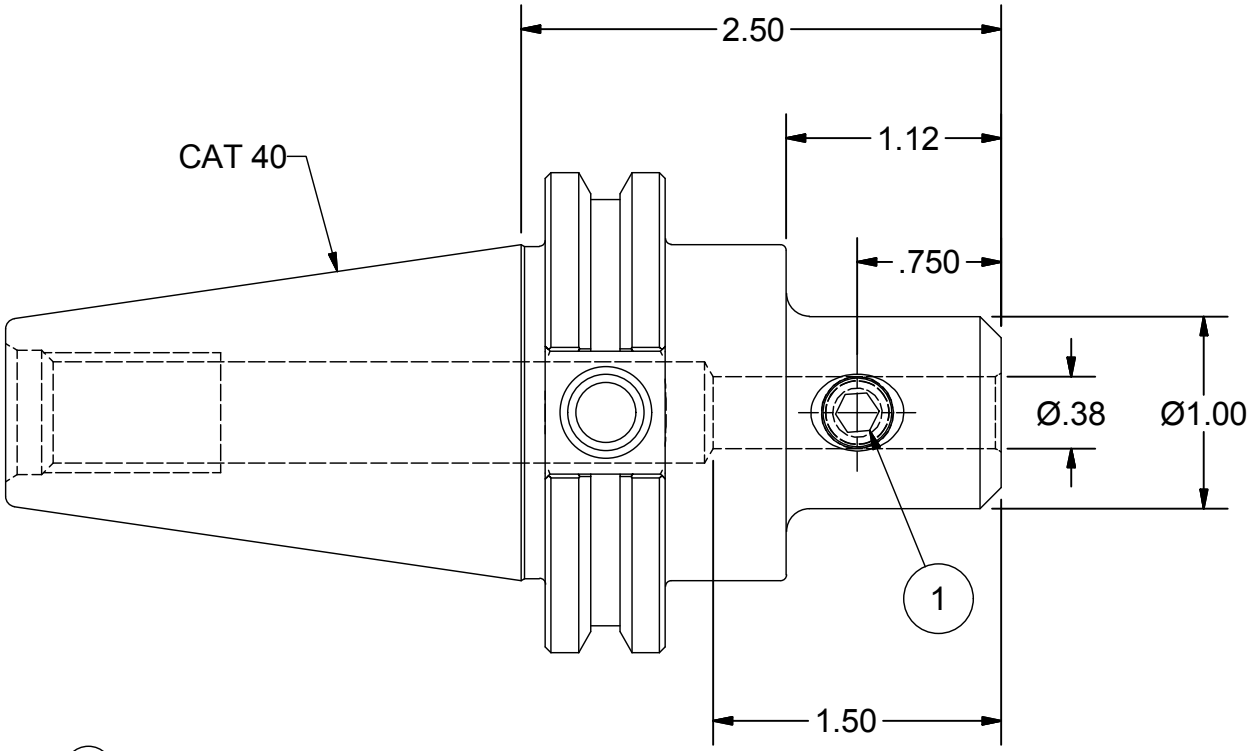

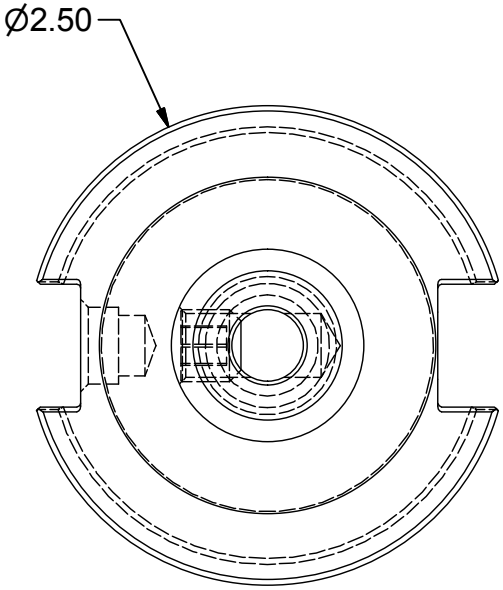

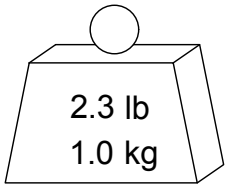

PART NUMBER

C40-37EM2

PARLEC
(800) TOOL USA
WORLD HEADQUARTERS
101 PERINTON PARKWAY
FAIRPORT, NEW YORK 14450