| Parts List | | | |
|---|---|---|---|
| ITEM | QTY | PART NUMBER | DESCRIPTION |
| 1 | 1 | 40ERPN-1 | COLLET NUT |
| 2 | 1 | BS-10 | BACK-UP SCREW; 1 1/8-16 L.H. |

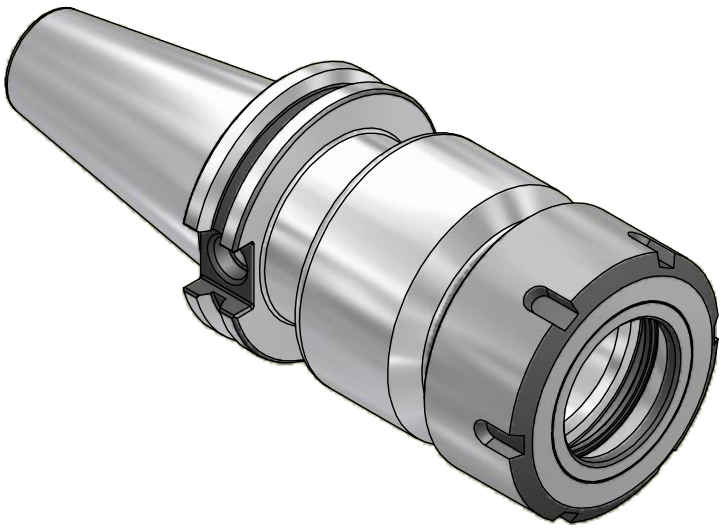

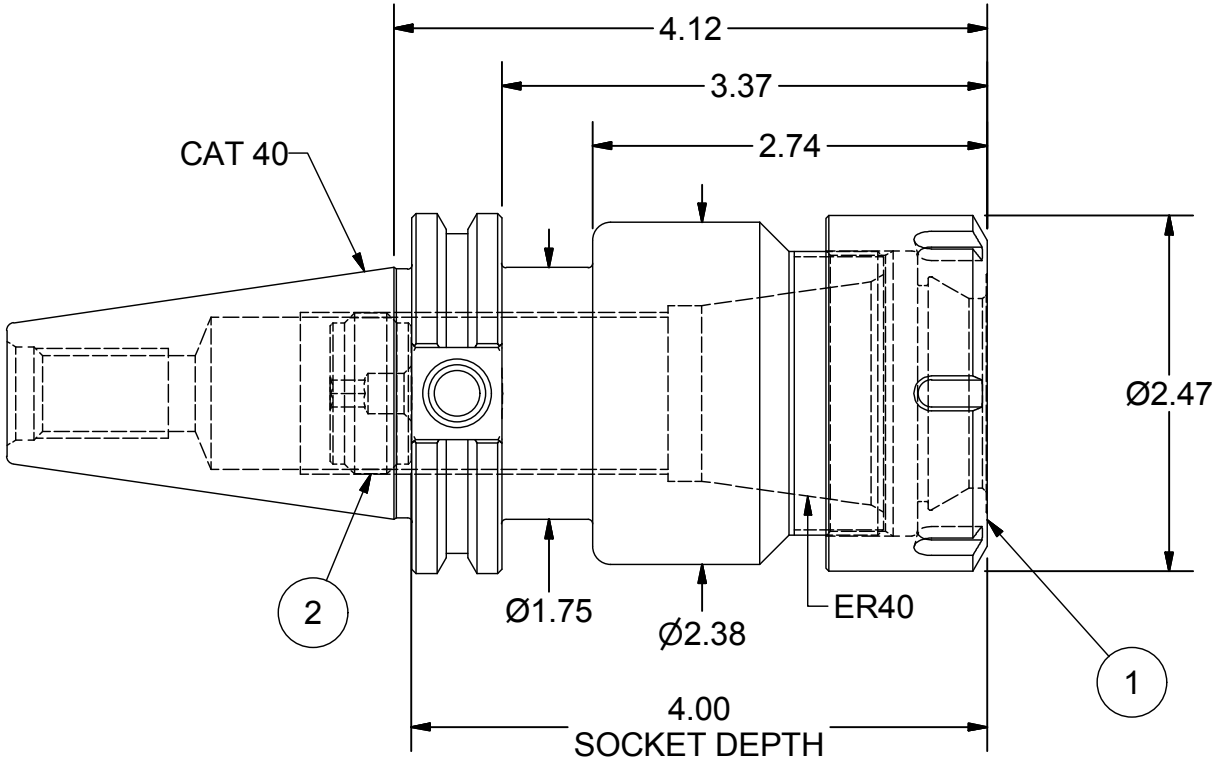


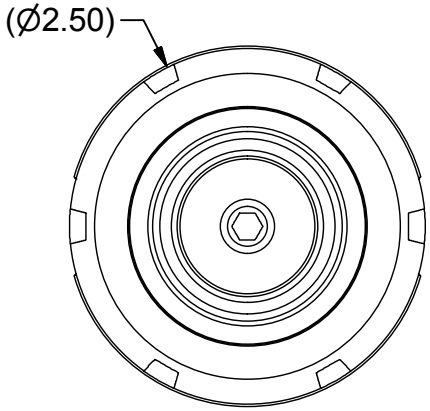


PART NUMBER

C40-40ER412

PARLEC
(800) TOOL USA
WORLD HEADQUARTERS
101 PERINTON PARKWAY
FAIRPORT, NEW YORK 14450