Parts List			
ITEM	QTY	PART NUMBER	DESCRIPTION
1	1	029-917	SET SCREW, WELDON 7/16-20x3/8

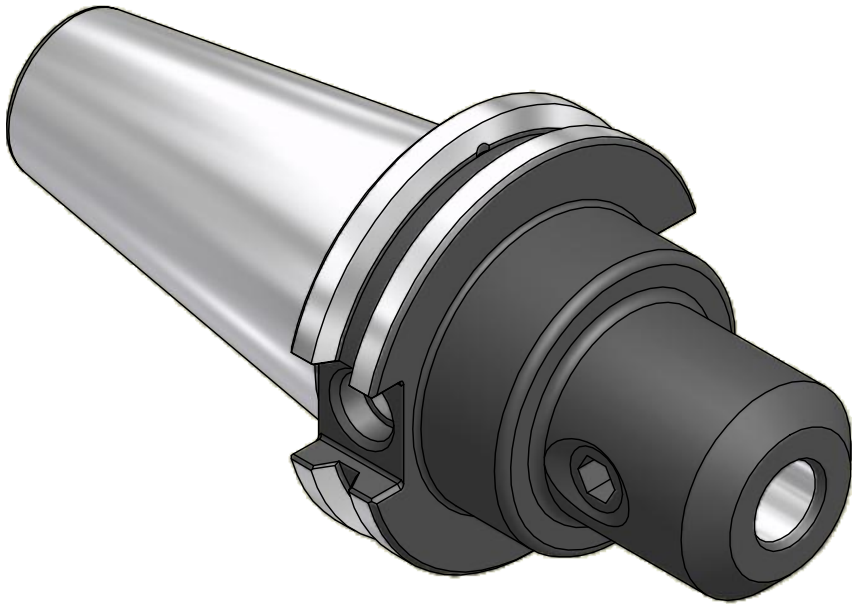

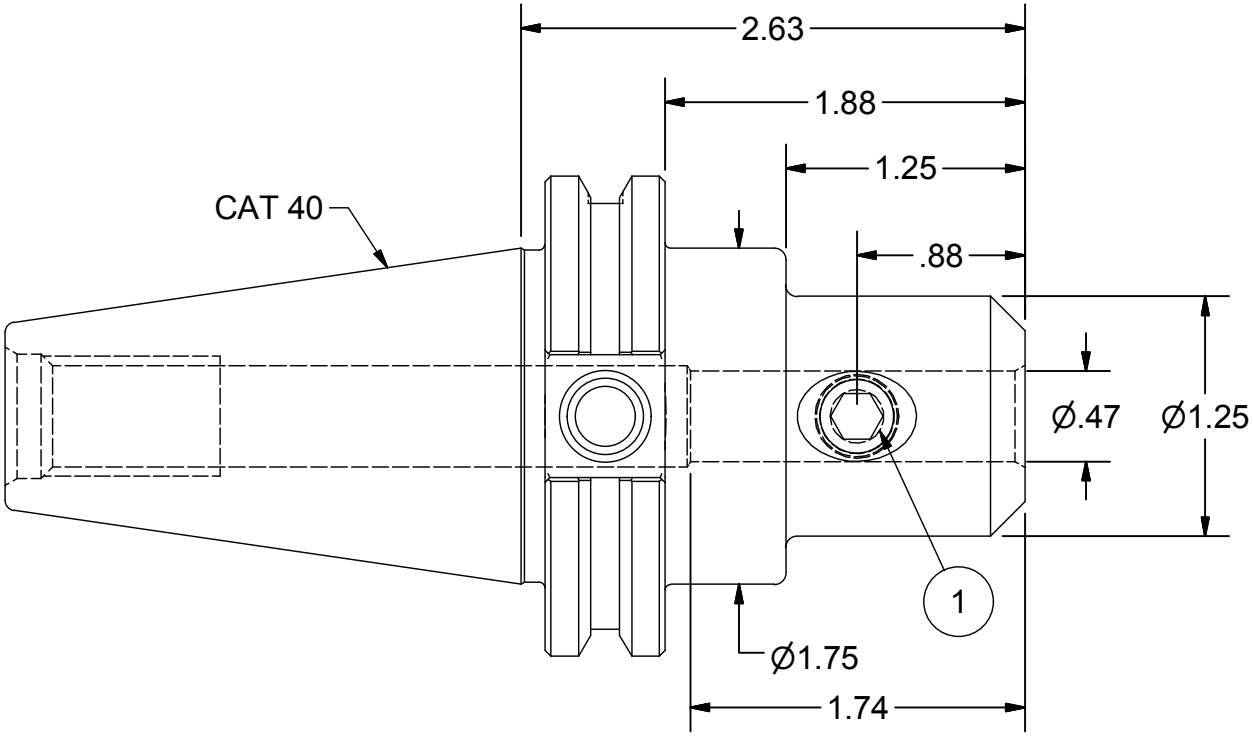

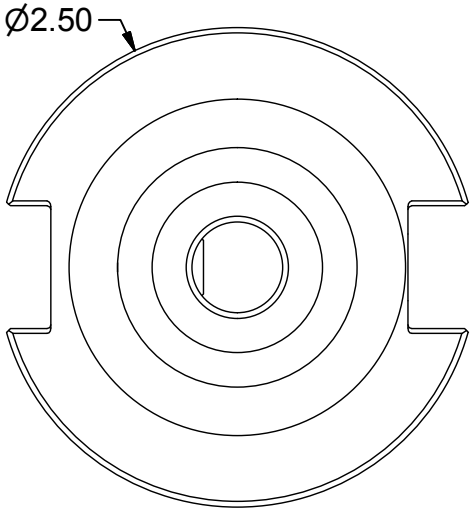

PART NUMBER

C40-M12EM2

PARLEC
(800) TOOL USA
WORLD HEADQUARTERS
101 PERINTON PARKWAY
FAIRPORT, NEW YORK 14450