Parts List			
ITEM	QTY	PART NUMBER	DESCRIPTION
1	1	029-925	SET SCREW, WELDON, 5/8-18 x 1/2

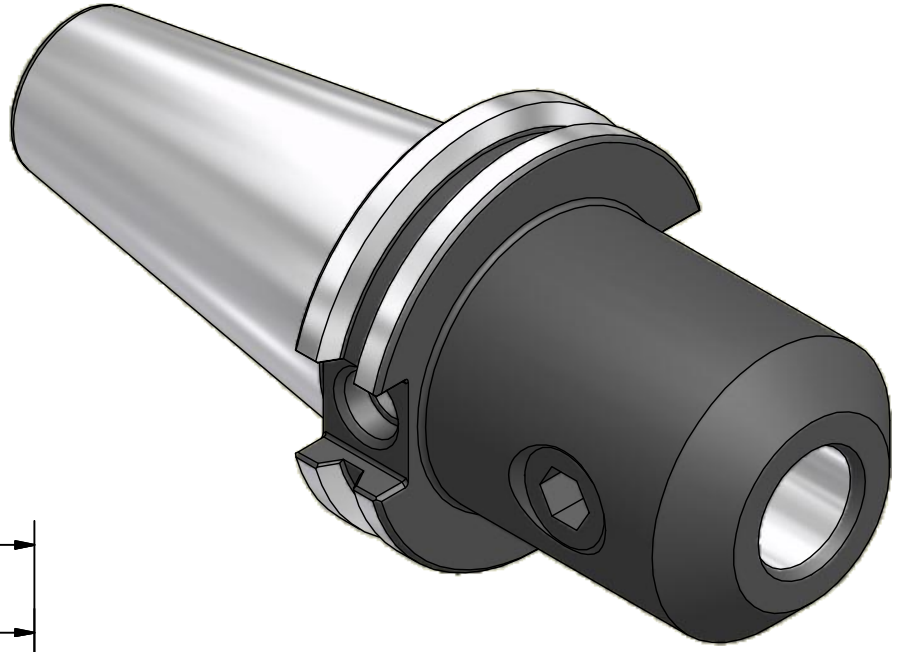

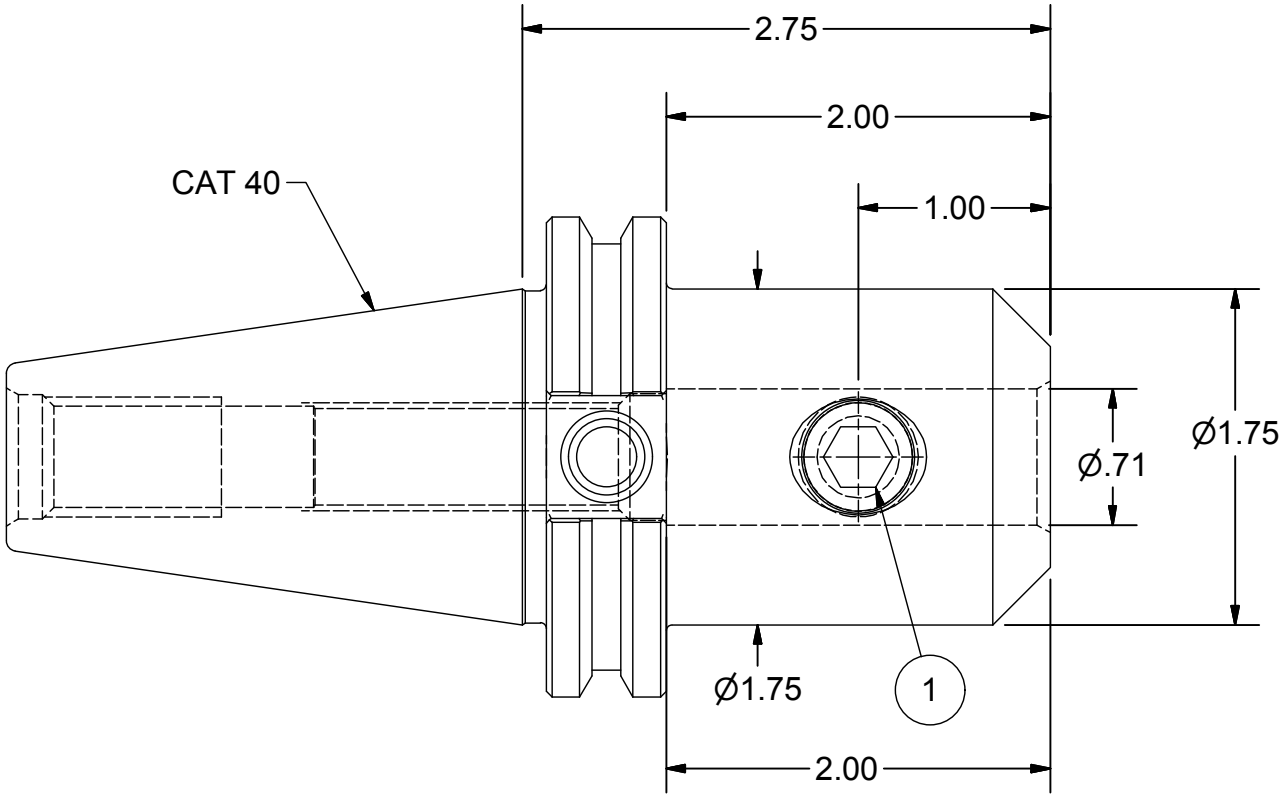

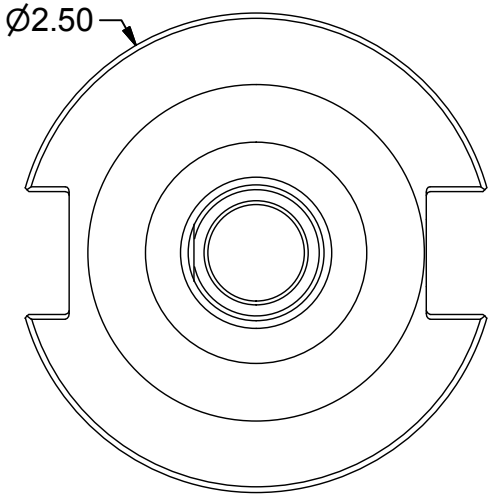

PART NUMBER

C40-M18EM2

PARLEC
(800) TOOL USA
WORLD HEADQUARTERS
101 PERINTON PARKWAY
FAIRPORT, NEW YORK 14450