Parts List			
ITEM	QTY	PART NUMBER	DESCRIPTION
1	2	12KY	DRIVE KEY
2	1	12LS	LOCK SCREW
3	1	028-193	SHCS 5/8-18 x 1-1/4
4	2	029-965	SET SCREW,M4 x 6 W/360 DEG. PATCH

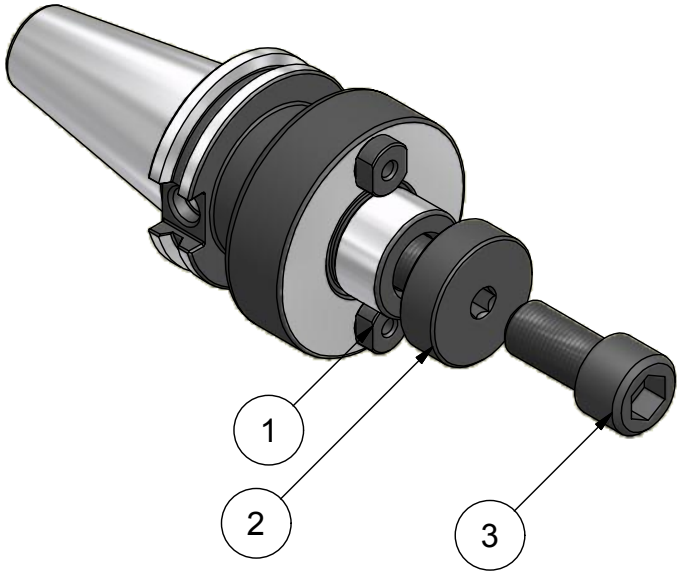

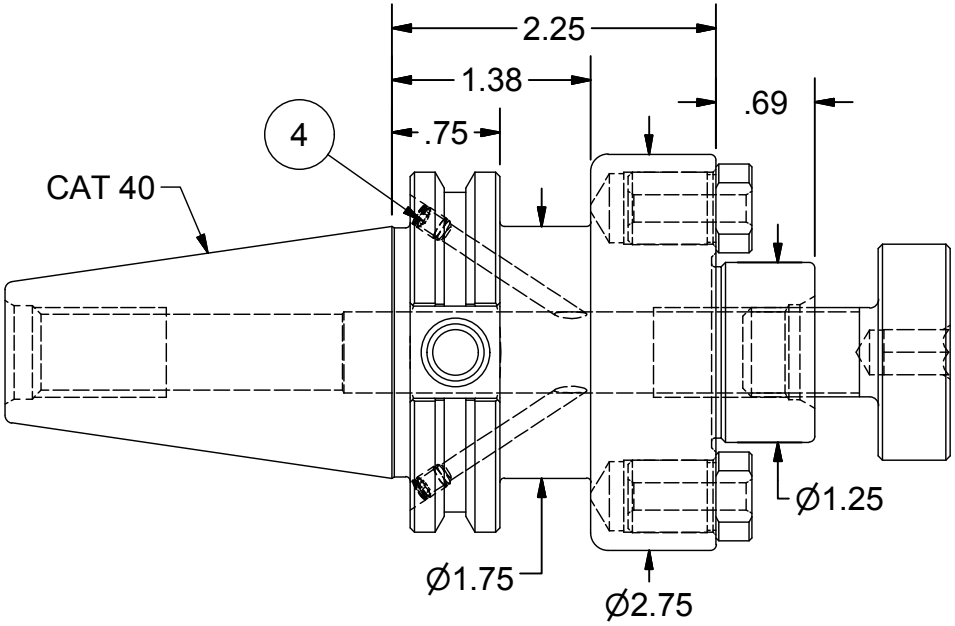

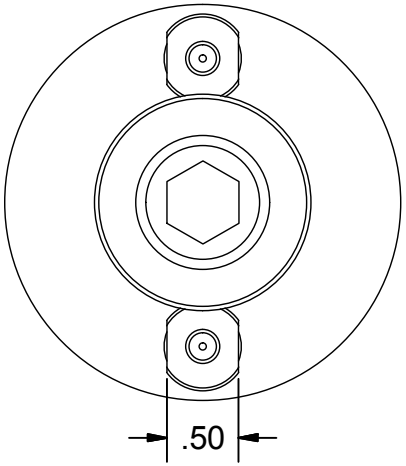

PART NUMBER

C40BC-12SM2

PARLEC
(800) TOOL USA
WORLD HEADQUARTERS
101 PERINTON PARKWAY
FAIRPORT, NEW YORK 14450