Parts List			
ITEM	QTY	PART NUMBER	DESCRIPTION
1	2	029-928	SET SCREW, Weldon 1"-14x7/8

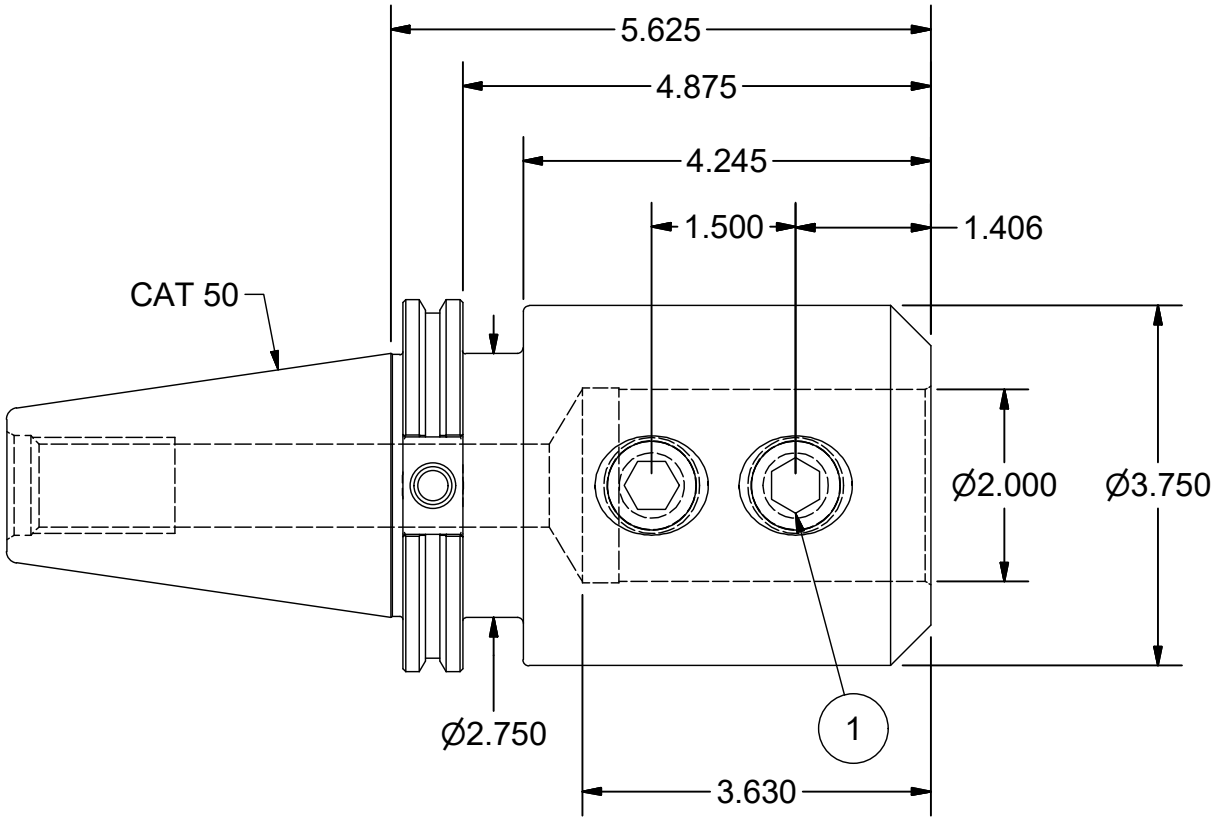

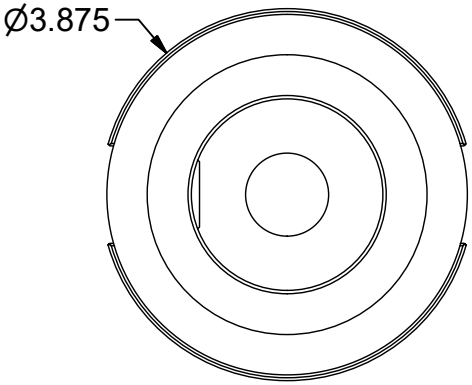

PART NUMBER

C50-20EM5

PARLEC
(800) TOOL USA
WORLD HEADQUARTERS
101 PERINTON PARKWAY
FAIRPORT, NEW YORK 14450