Parts List			
ITEM	QTY	PART NUMBER	DESCRIPTION
1	1	20ERHPN	COLLET NUT, ER20

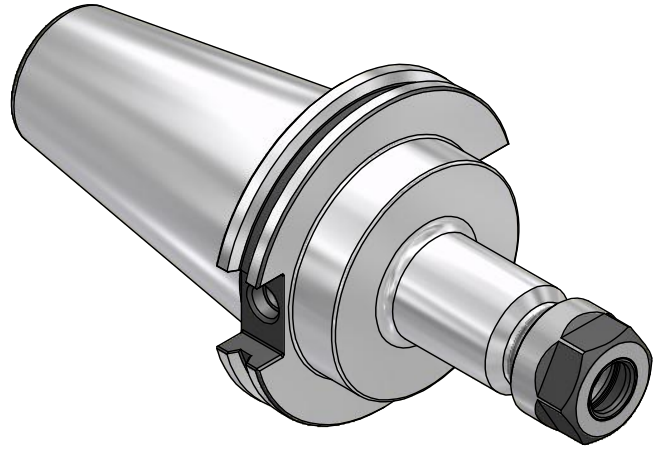

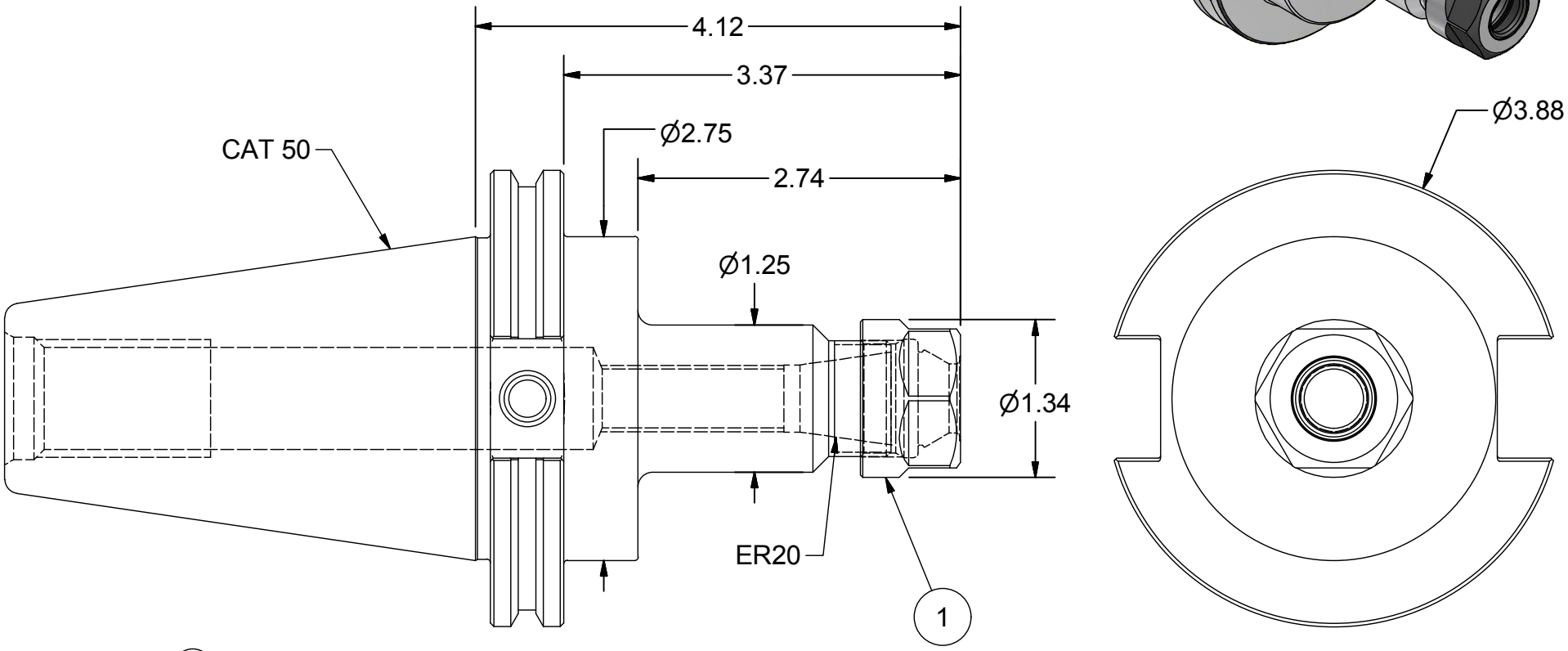

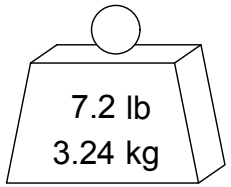

PART NUMBER

C50-20ERP412

PARLEC
(800) TOOL USA
WORLD HEADQUARTERS
101 PERINTON PARKWAY
FAIRPORT, NEW YORK 14450