Parts List			
ITEM	QTY	PART NUMBER	DESCRIPTION
1	2	029-925	SET SCREW, WELDON, 5/8-18 x 1/2

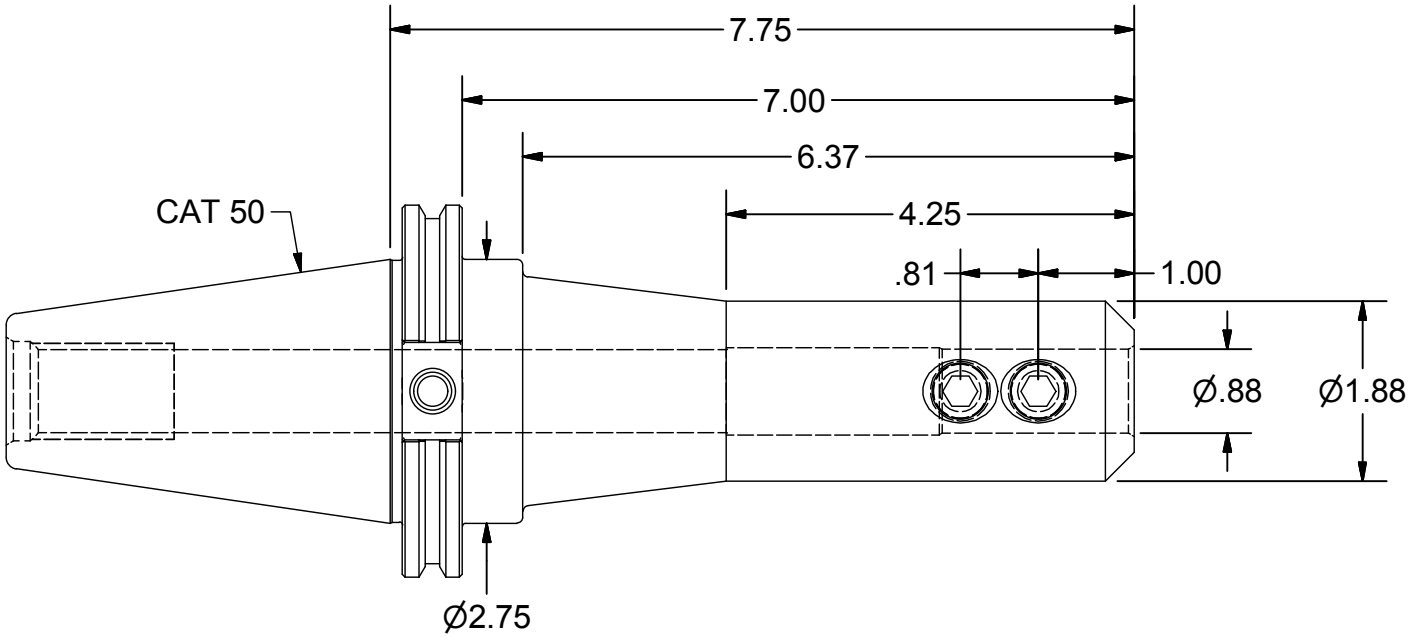

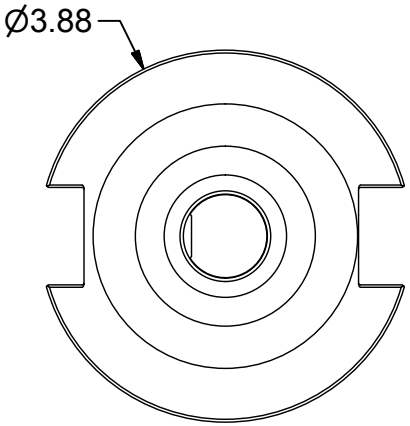

PART NUMBER

C50-87EM7

PARLEC
(800) TOOL USA
WORLD HEADQUARTERS
101 PERINTON PARKWAY
FAIRPORT, NEW YORK 14450