Parts List			
ITEM	QTY	PART NUMBER	DESCRIPTION
1	1	25ERPN	COLLET NUT

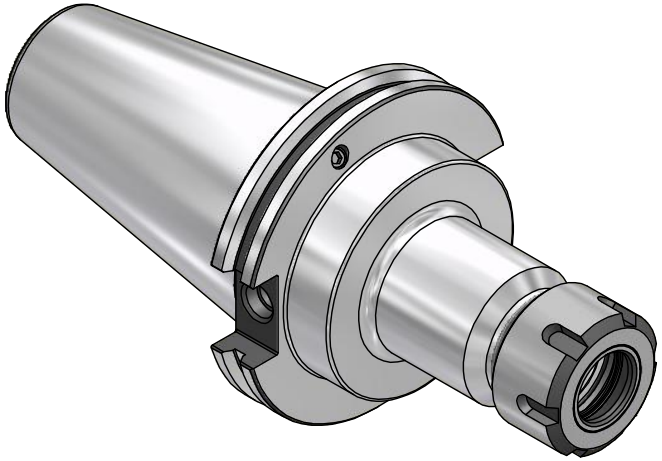

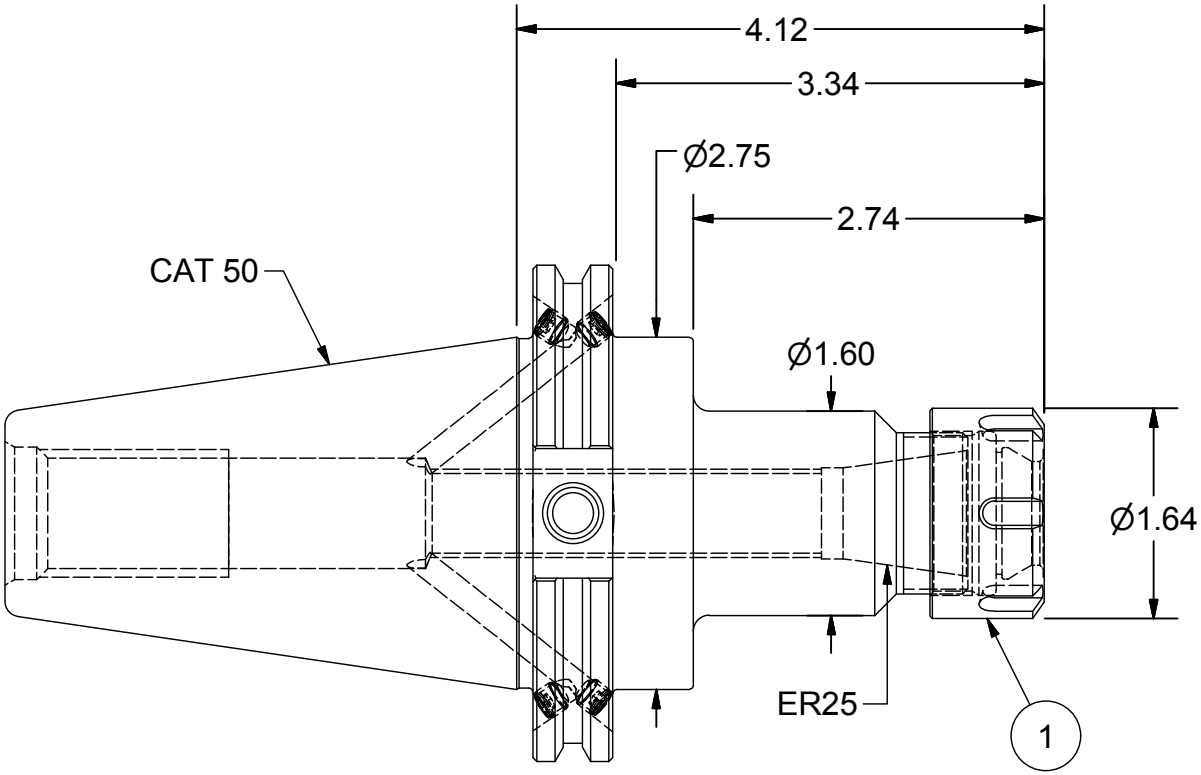

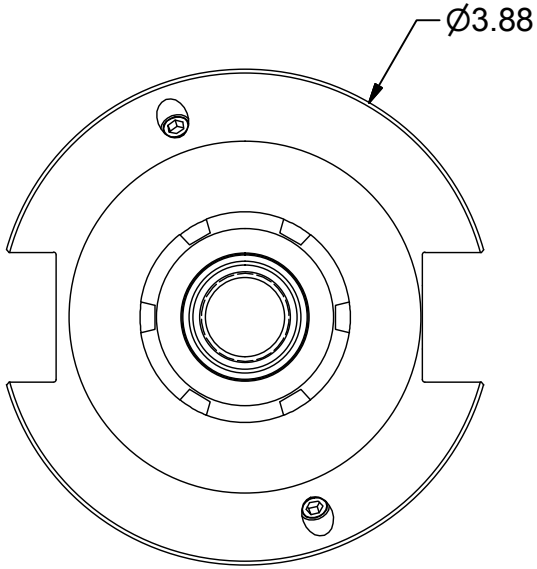

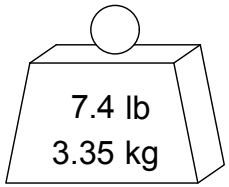

PART NUMBER

C50BC-25ERP412

PARLEC
(800) TOOL USA
WORLD HEADQUARTERS
101 PERINTON PARKWAY
FAIRPORT, NEW YORK 14450