Parts List			
ITEM	QTY	PART NUMBER	DESCRIPTION
1	1	029-925	SET SCREW, WELDON, 5/8-18 x 1/2
2	4	029-966	SET SCREW,M6 x 5 W/360 DEG. PATCH

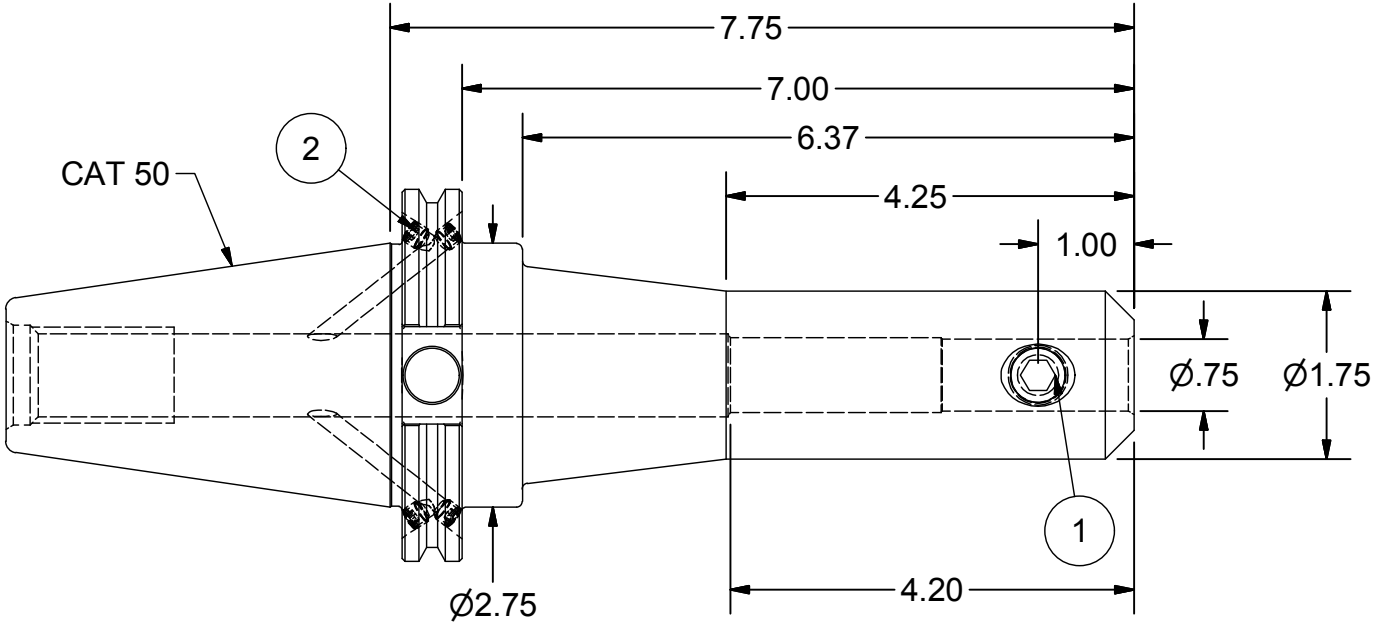

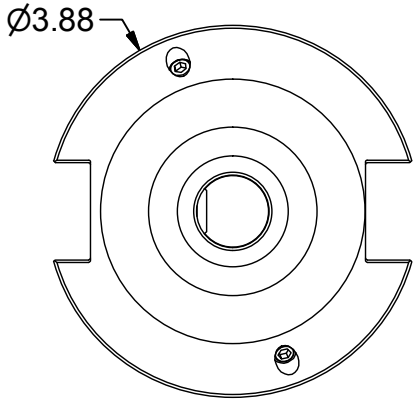

PART NUMBER

C50BC-75EM7

PARLEC
(800) TOOL USA
WORLD HEADQUARTERS
101 PERINTON PARKWAY
FAIRPORT, NEW YORK 14450